8. Level 3 Repair

8-1. Block Diagram

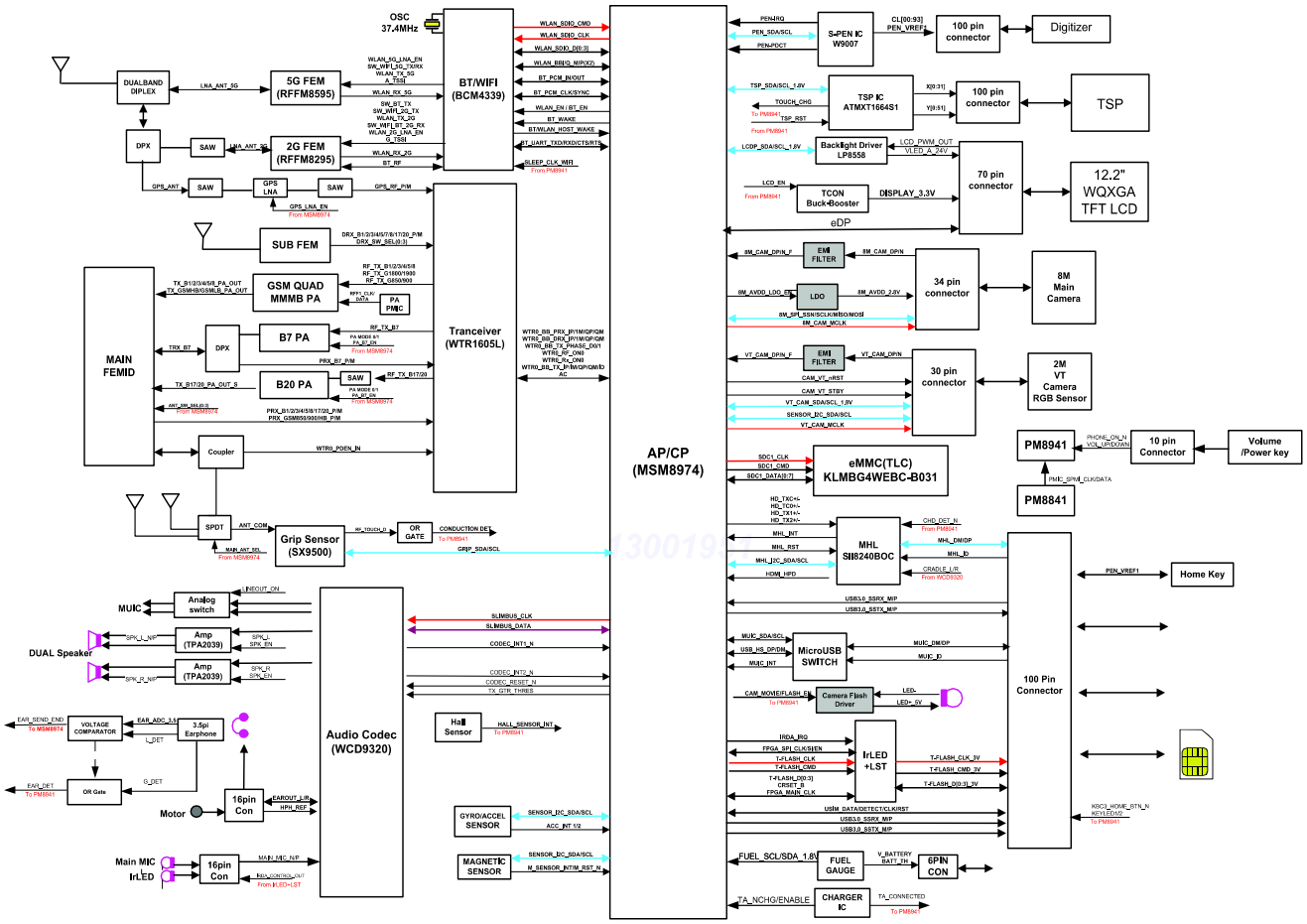

Confidential and proprietary-the contents in this service guide subject to change without prior notice.
Distribution, transmission, or infringement of any content or data from this document without Samsung's written authorization is strictly prohibited.

8-2. PCB Diagrams

8-2-1. Main PCB Top

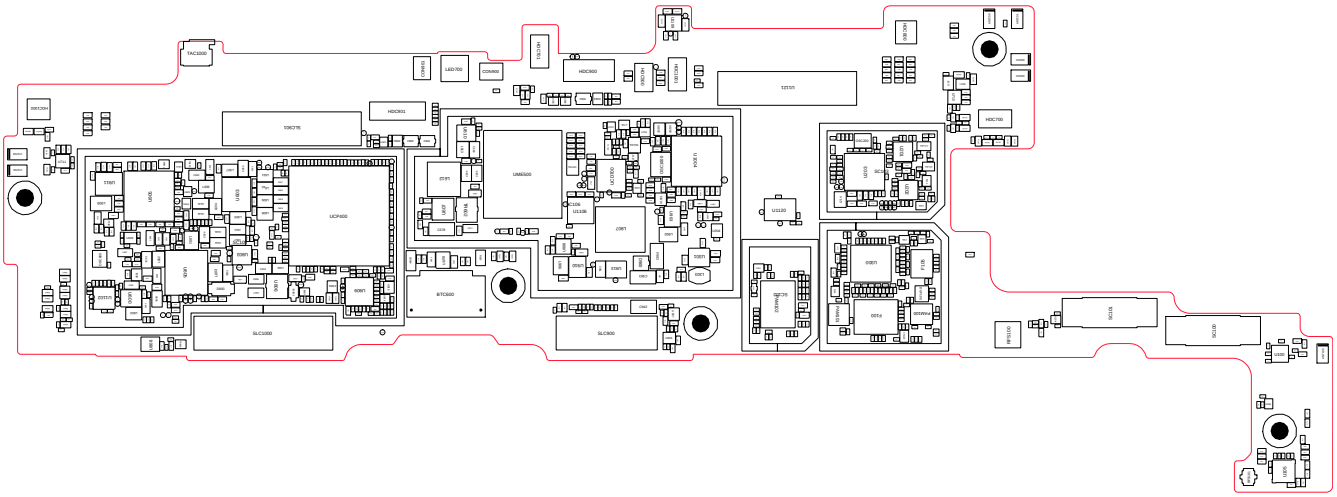

8-2-2. Bottom

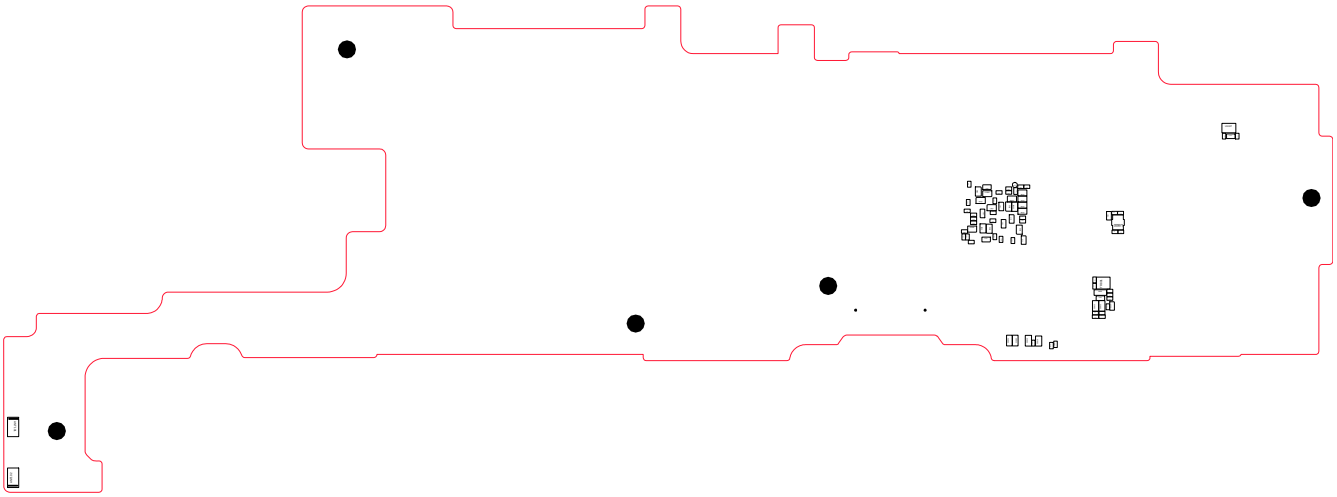

Confidential and proprietary-the contents in this service guide subject to change without prior notice.
Distribution, transmission, or infringement of any content or data from this document without Samsung's written authorization is strictly prohibited.

8-3. Flow Chart of Troubleshooting

Equipments

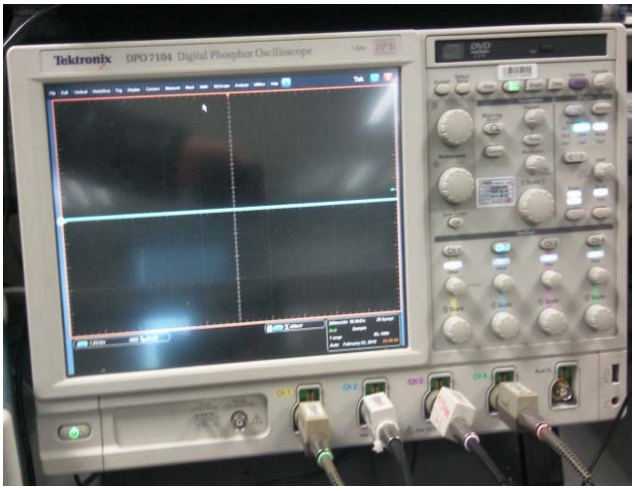

↑ Oscilloscope

↑ Digital Multimeter

↑ Power Supply

↑ + driver, ESD Safe Tweezer

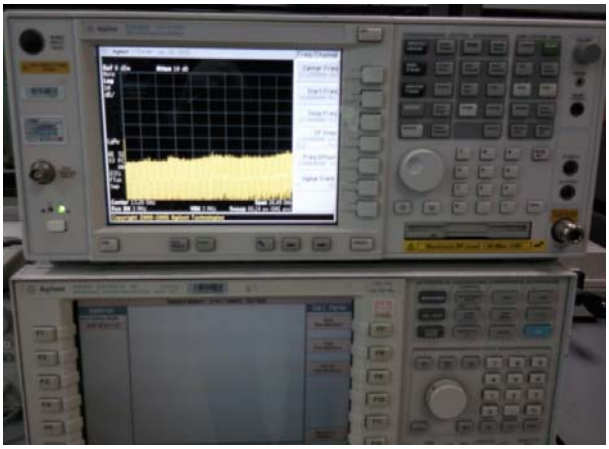

↑ 8960 & Spectrum Analyzer

↑ Soldering iron

Confidential and proprietary-the contents in this service guide subject to change without prior notice.
Distribution, transmission, or infringement of any content or data from this document without Samsung's written authorization is strictly prohibited.

8-3-1. Power On

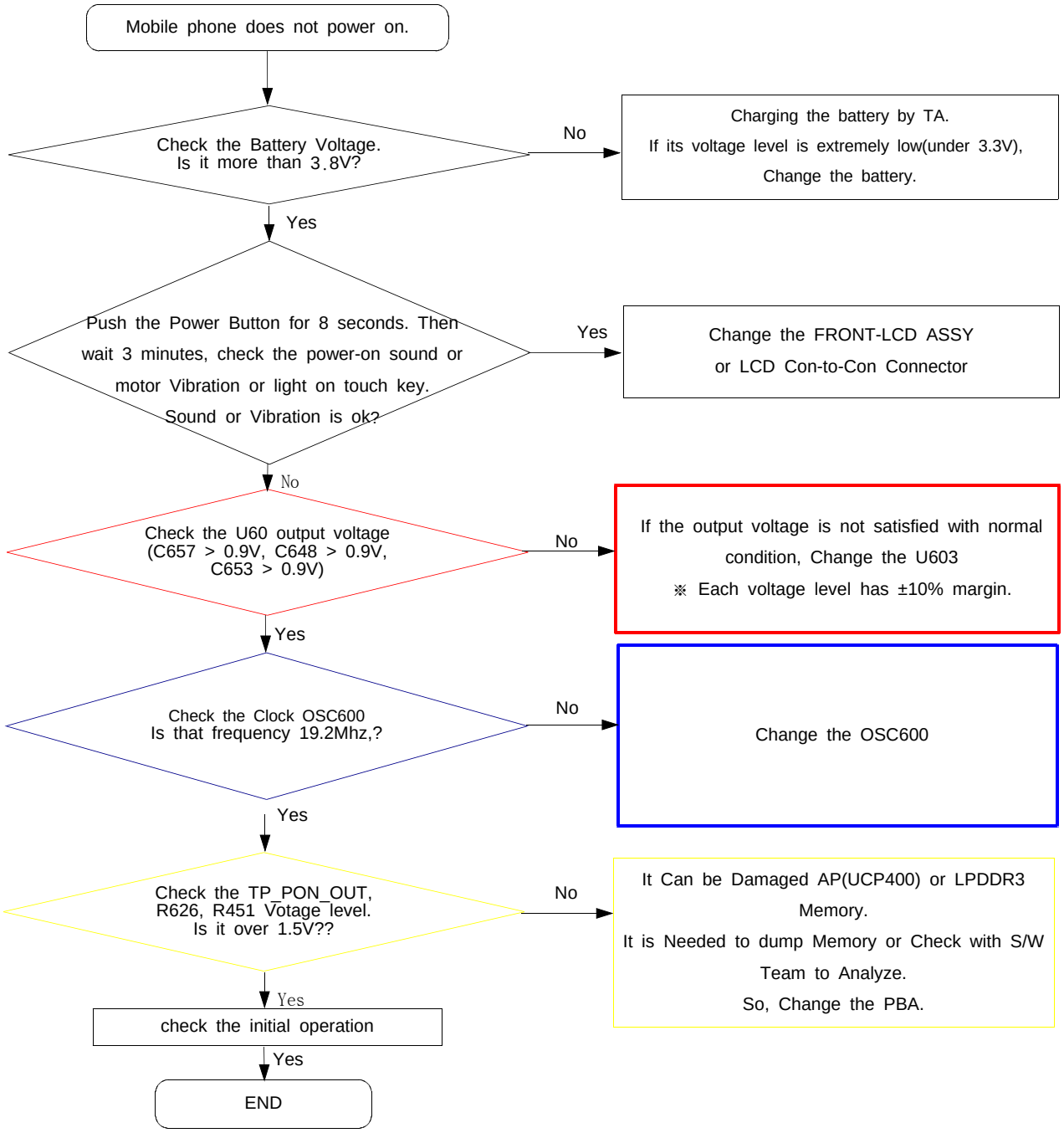

Confidential and proprietary-the contents in this service guide subject to change without prior notice.
Distribution, transmission, or infringement of any content or data from this document without Samsung's written authorization is strictly prohibited.

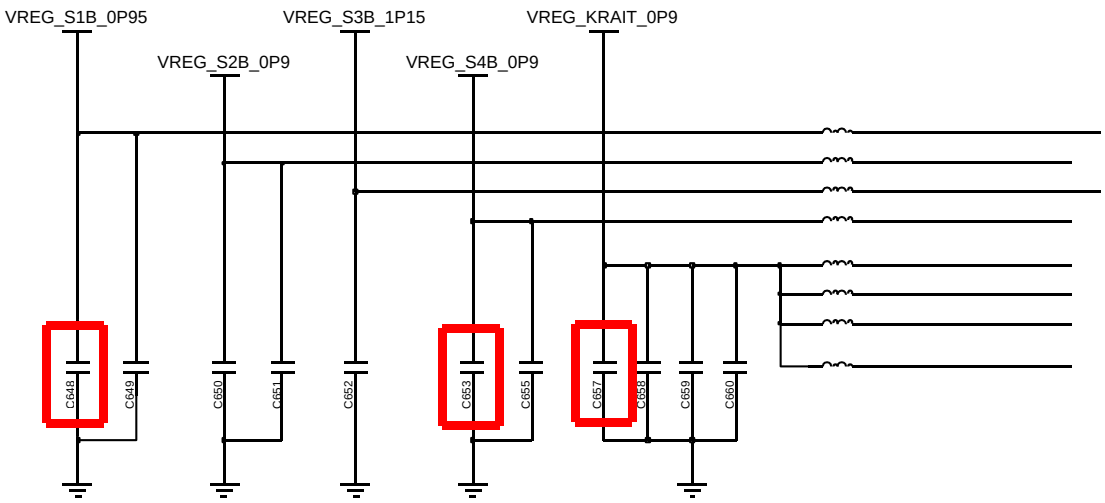

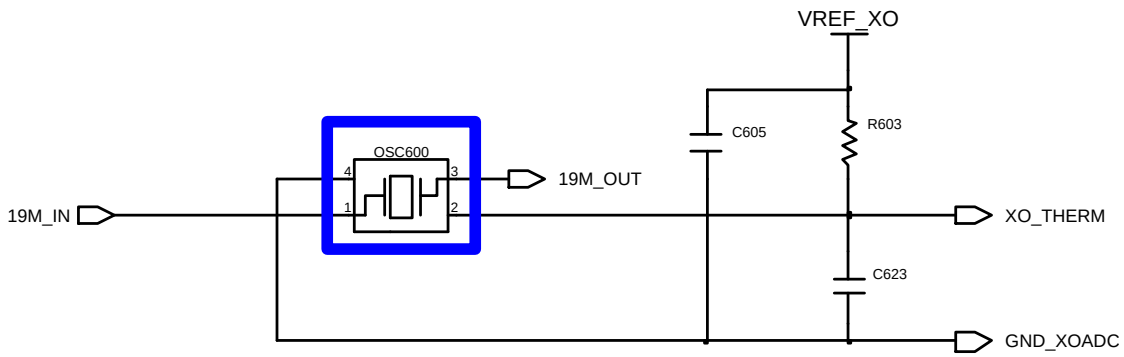

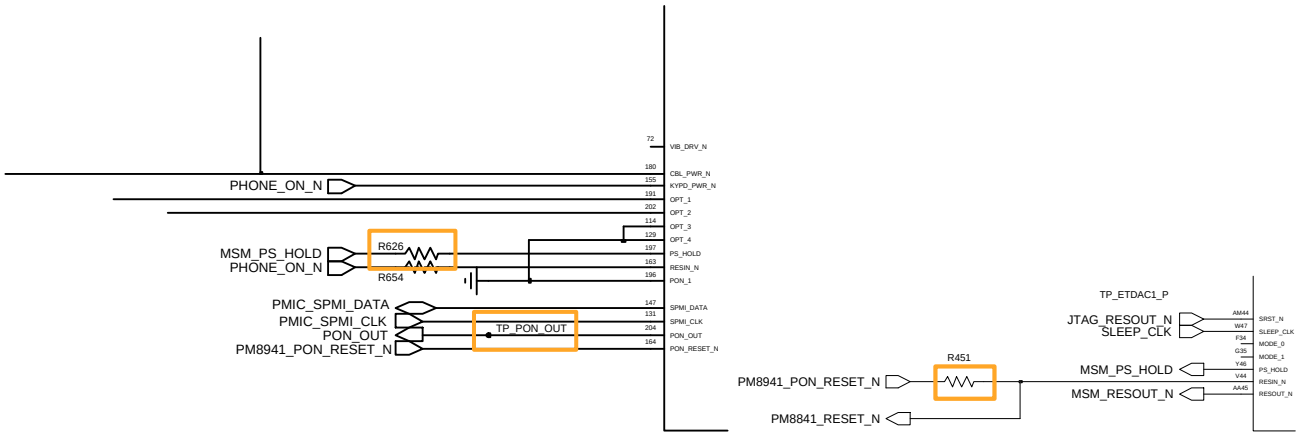

Confidential and proprietary-the contents in this service guide subject to change without prior notice.
Distribution, transmission, or infringement of any content or data from this document without Samsung's written authorization is strictly prohibited.

Confidential and proprietary-the contents in this service guide subject to change without prior notice.
Distribution, transmission, or infringement of any content or data from this document without Samsung's written authorization is strictly prohibited.

8-3-2. Initial

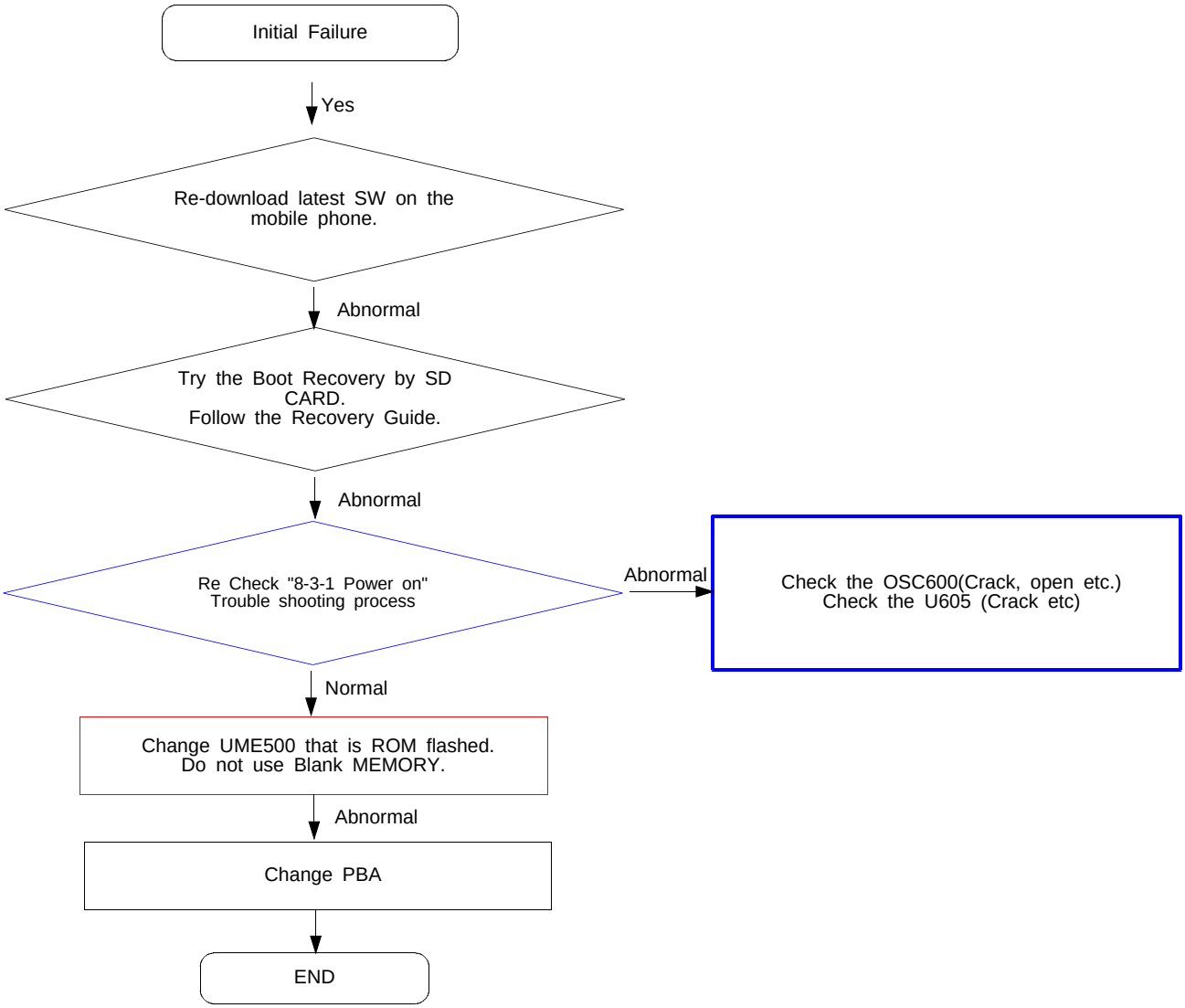

Confidential and proprietary-the contents in this service guide subject to change without prior notice.
Distribution, transmission, or infringement of any content or data from this document without Samsung's written authorization is strictly prohibited.

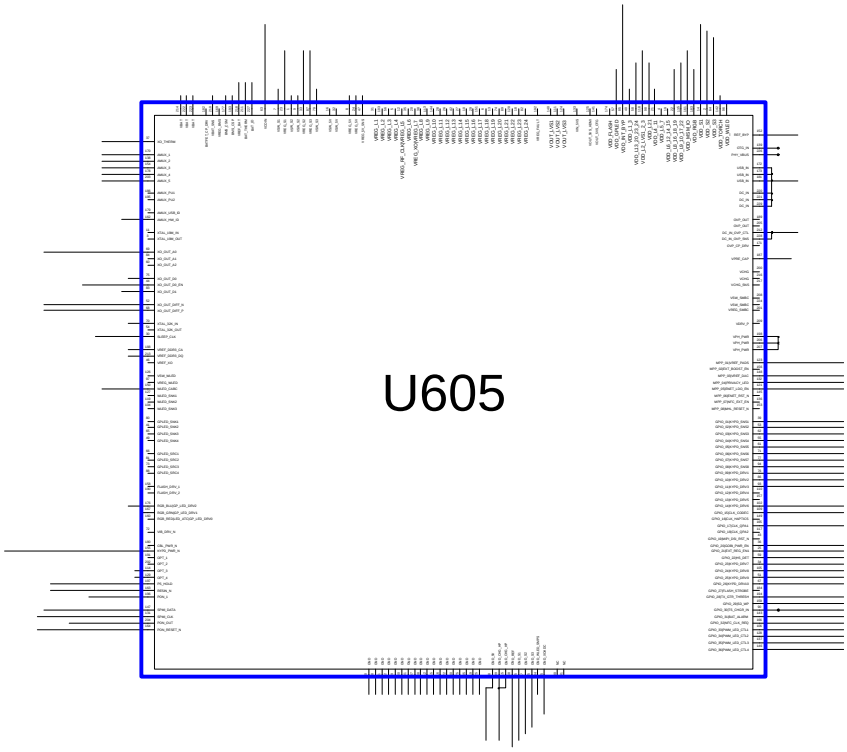

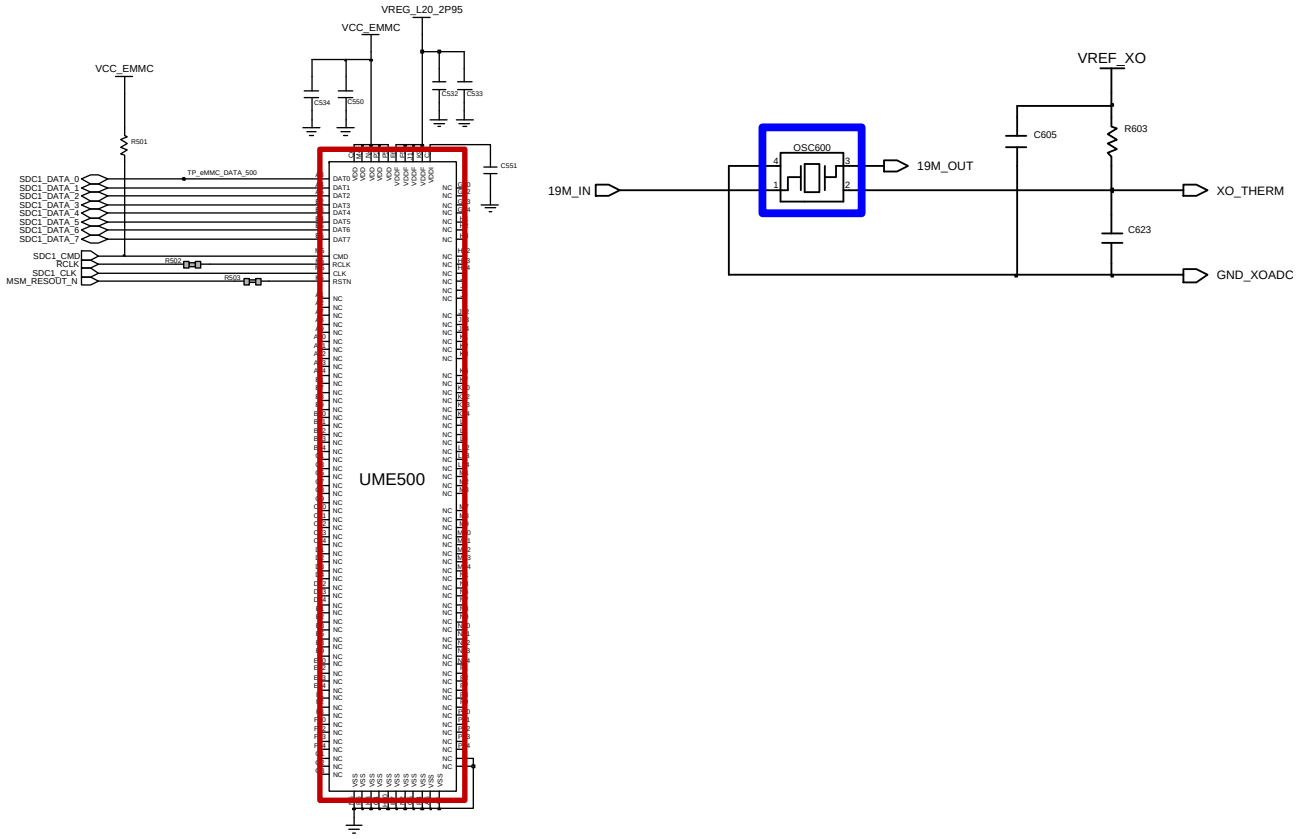

Confidential and proprietary-the contents in this service guide subject to change without prior notice.
Distribution, transmission, or infringement of any content or data from this document without Samsung's written authorization is strictly prohibited.

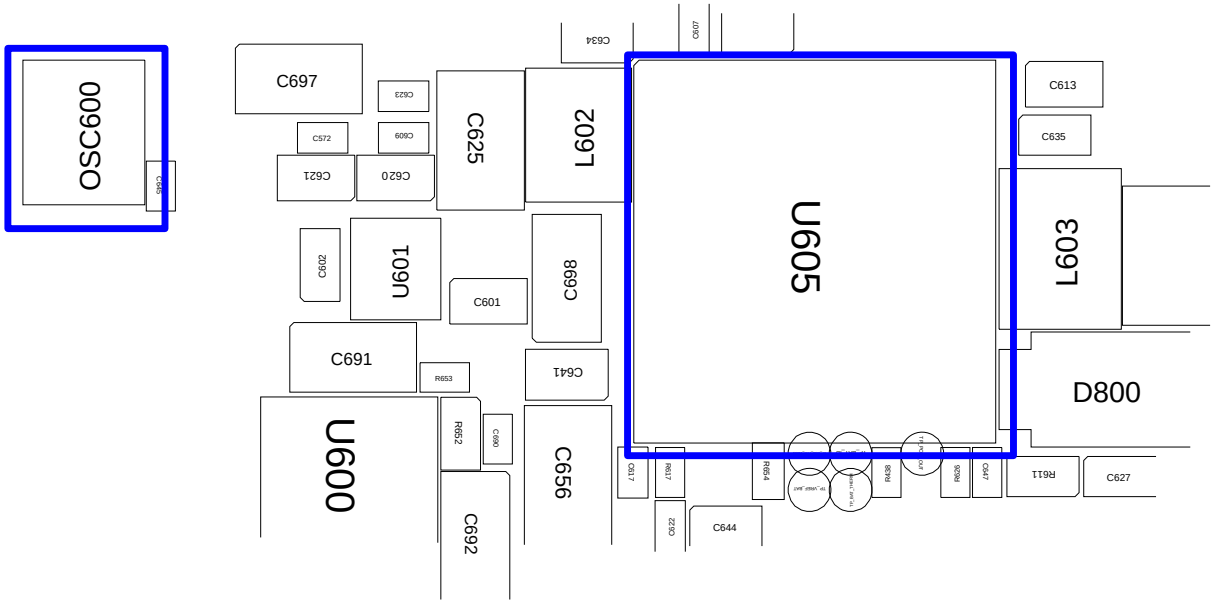

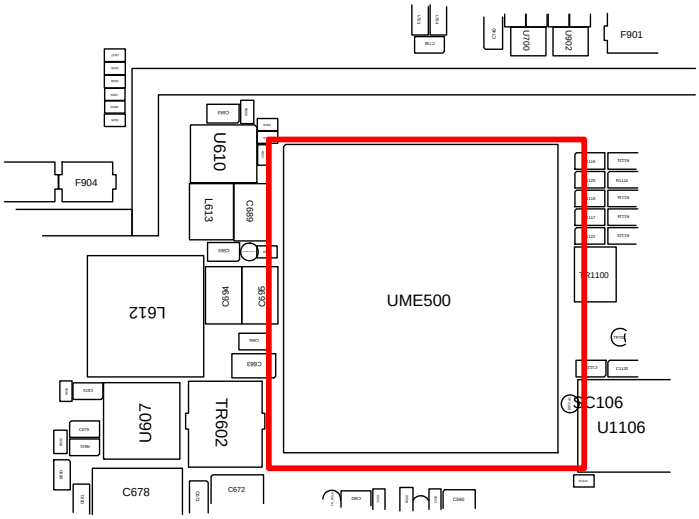

Confidential and proprietary-the contents in this service guide subject to change without prior notice.
Distribution, transmission, or infringement of any content or data from this document without Samsung's written authorization is strictly prohibited.

8-3-3. No Service

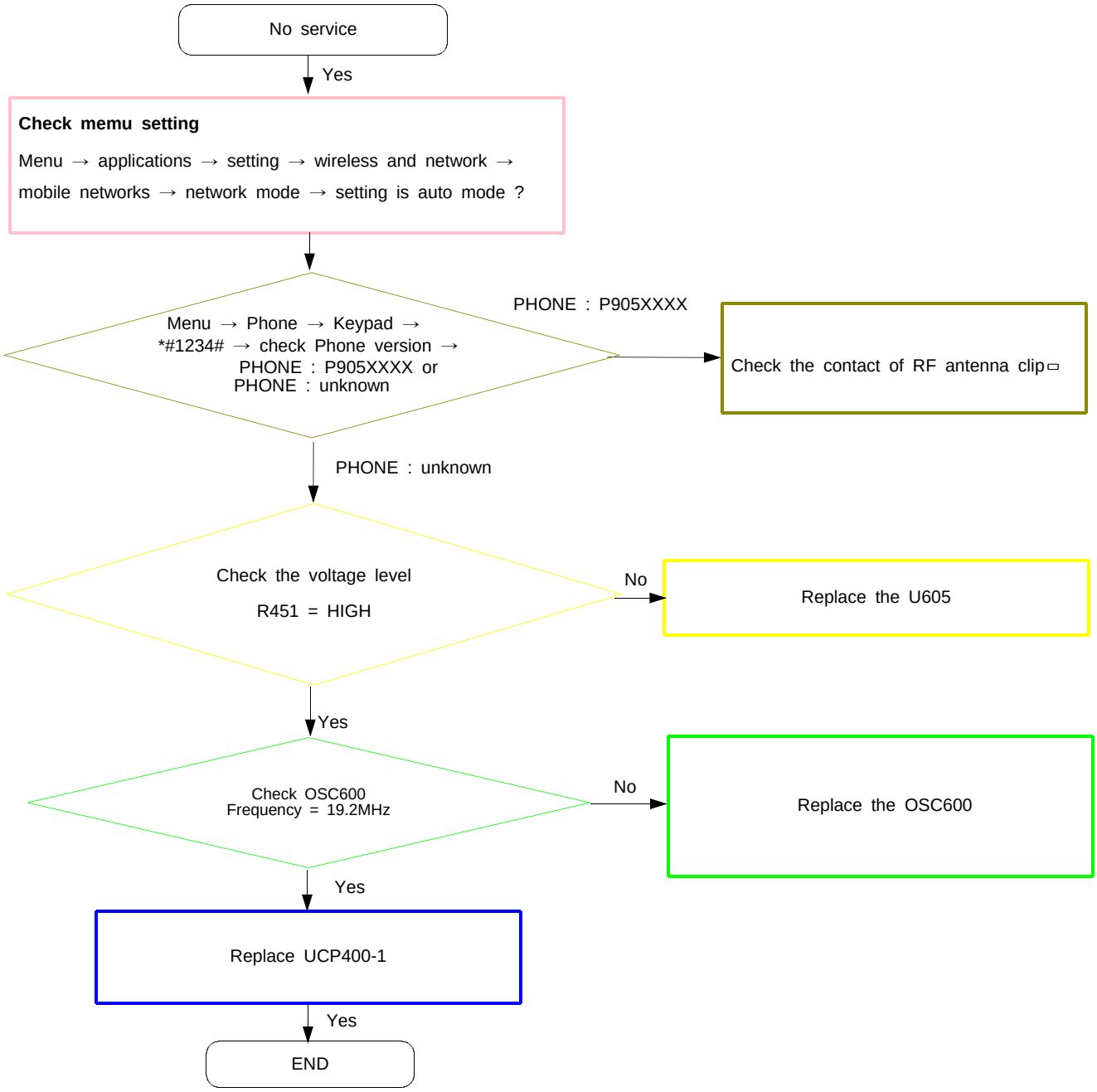

Confidential and proprietary-the contents in this service guide subject to change without prior notice.
Distribution, transmission, or infringement of any content or data from this document without Samsung's written authorization is strictly prohibited.

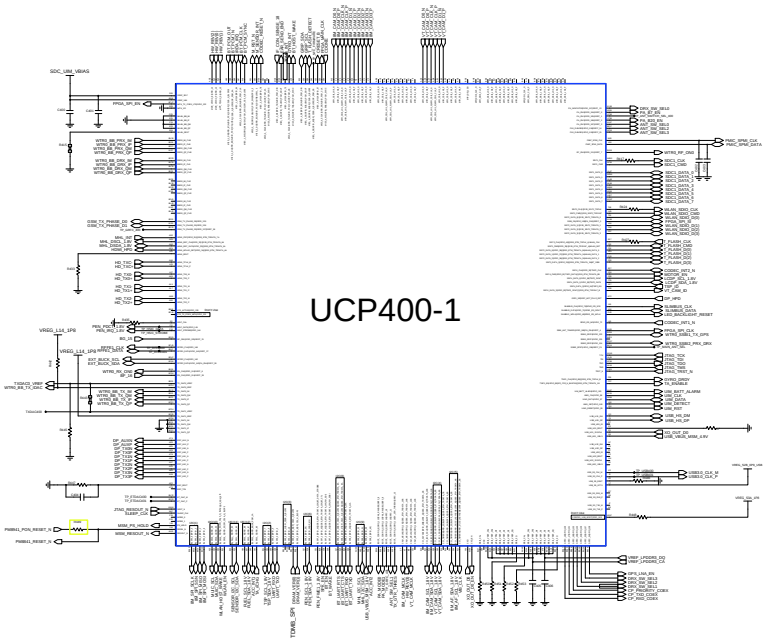

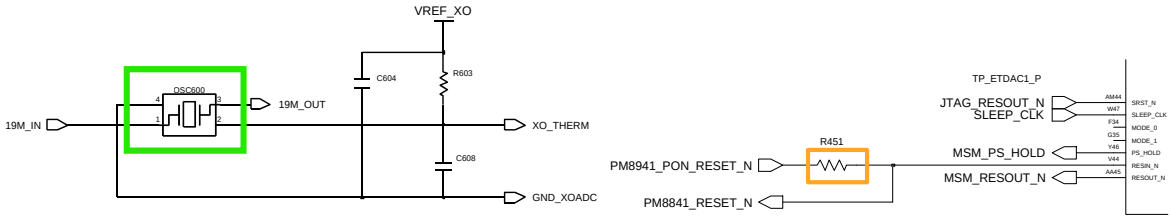

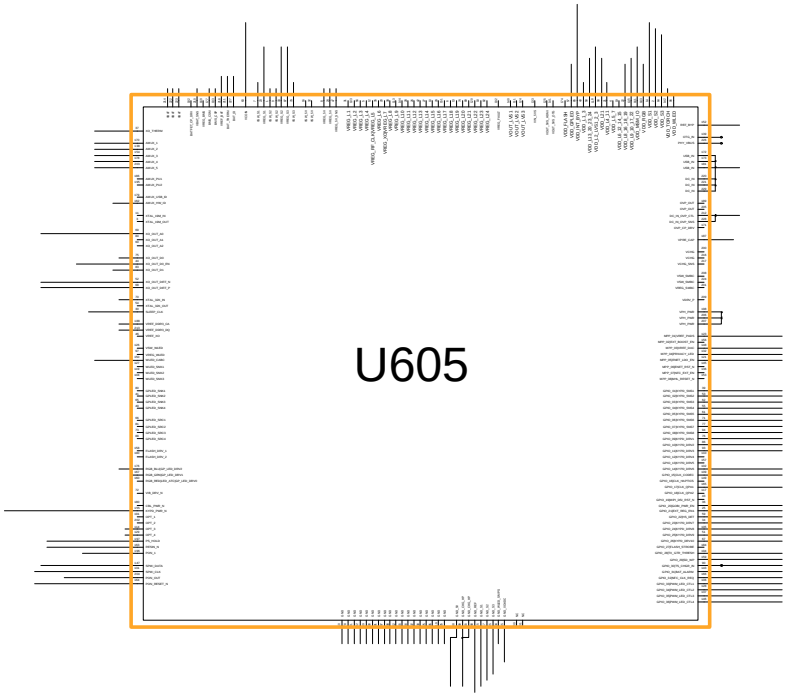

Confidential and proprietary-the contents in this service guide subject to change without prior notice.
Distribution, transmission, or infringement of any content or data from this document without Samsung's written authorization is strictly prohibited.

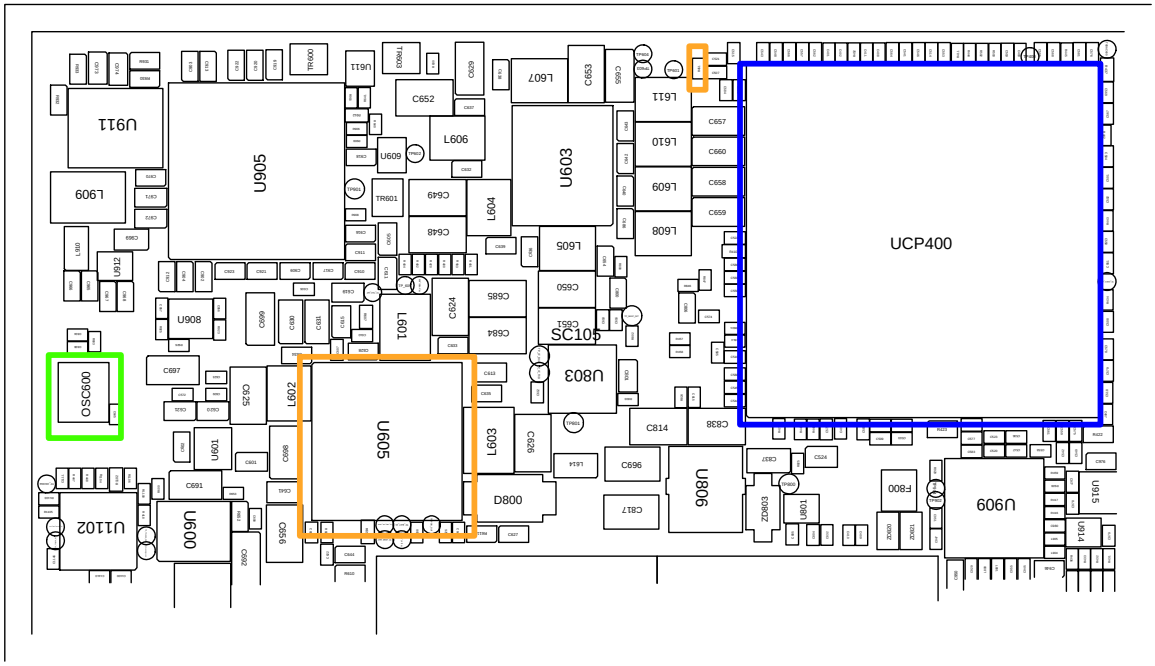

Confidential and proprietary-the contents in this service guide subject to change without prior notice.
Distribution, transmission, or infringement of any content or data from this document without Samsung's written authorization is strictly prohibited.

8-3-4. Charging Part

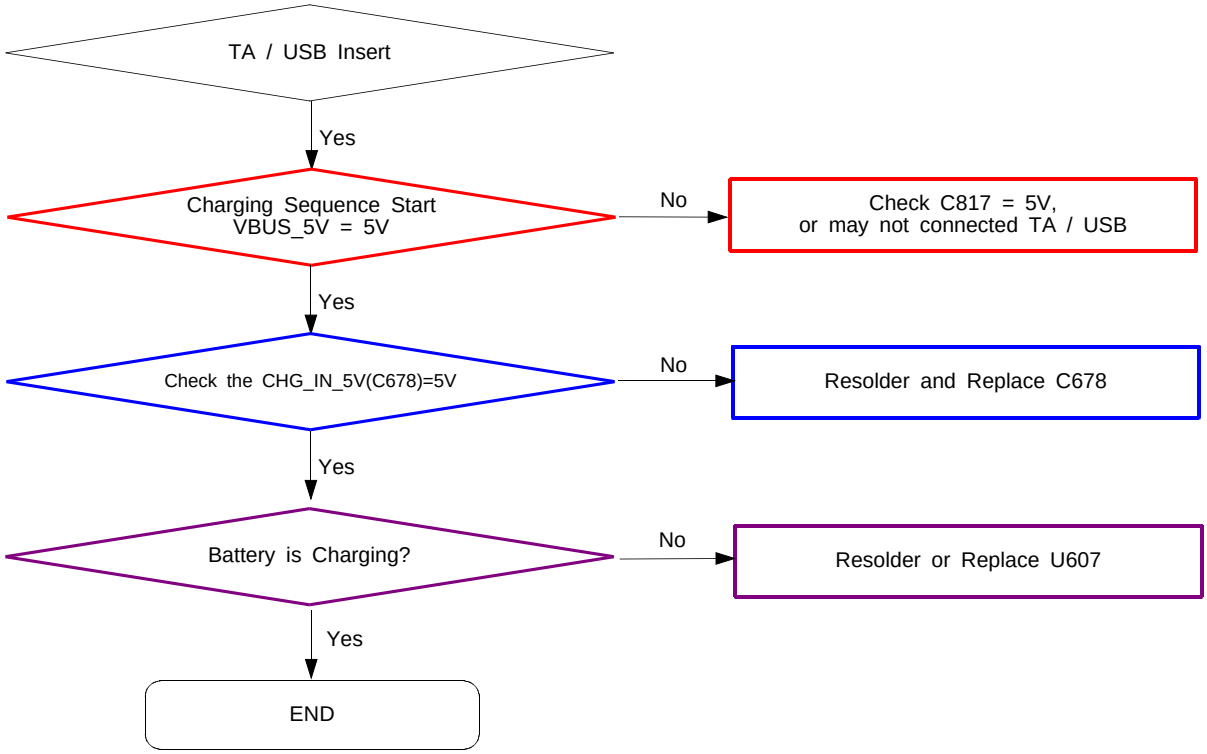

Confidential and proprietary-the contents in this service guide subject to change without prior notice.
Distribution, transmission, or infringement of any content or data from this document without Samsung's written authorization is strictly prohibited.

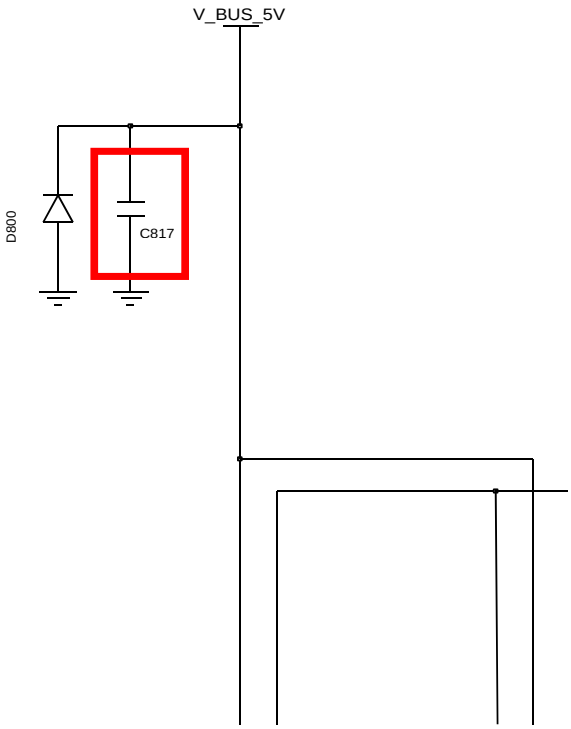

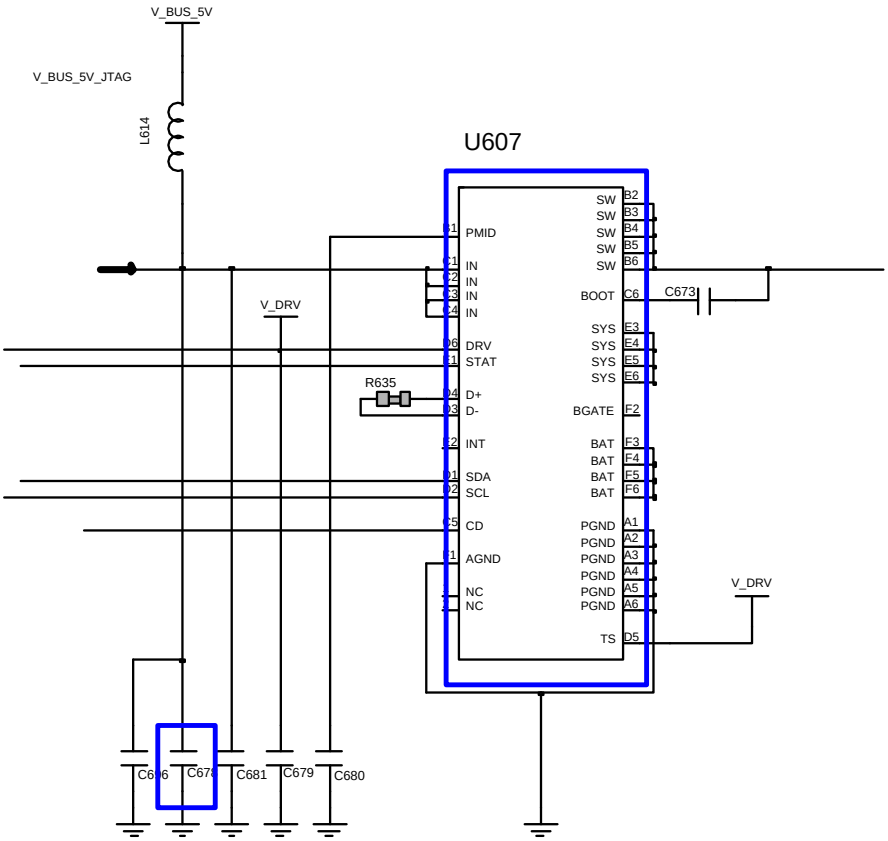

Confidential and proprietary-the contents in this service guide subject to change without prior notice.
Distribution, transmission, or infringement of any content or data from this document without Samsung's written authorization is strictly prohibited.

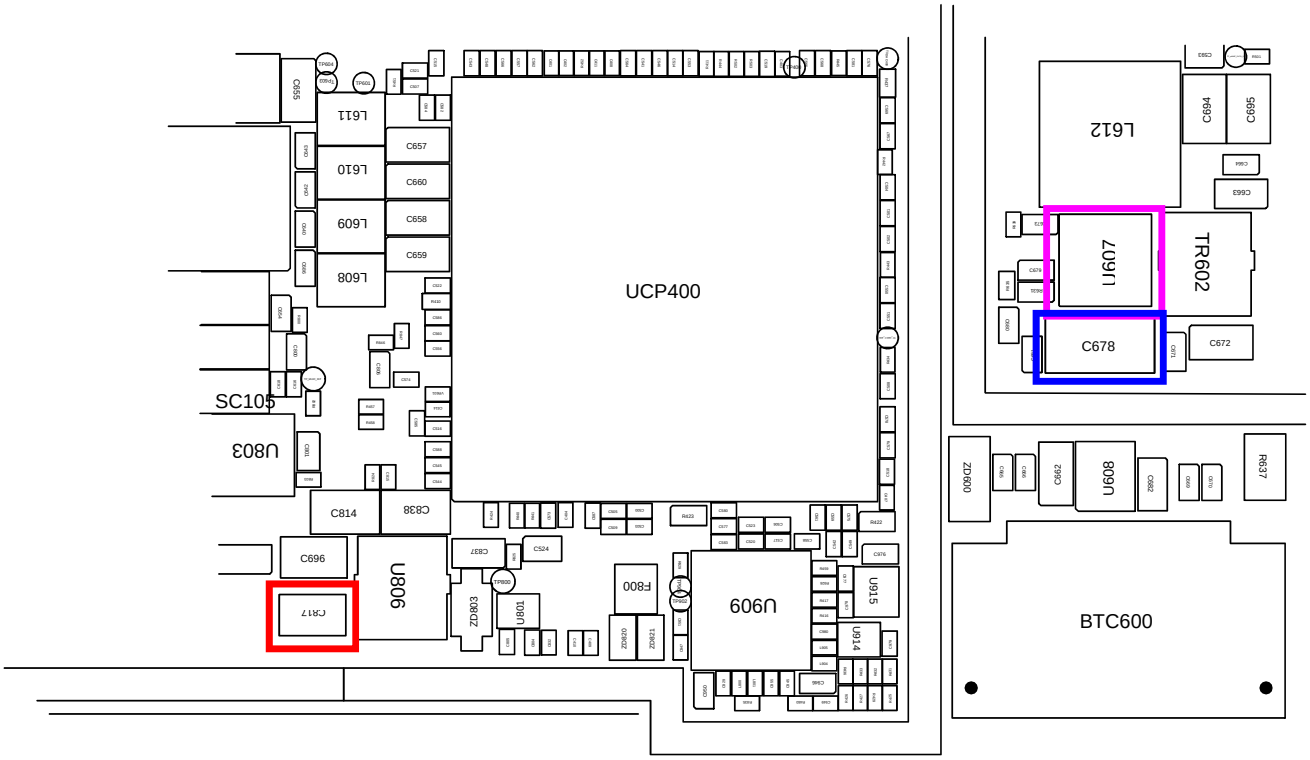

Confidential and proprietary-the contents in this service guide subject to change without prior notice.
Distribution, transmission, or infringement of any content or data from this document without Samsung's written authorization is strictly prohibited.

8-3-5 Microphone Part

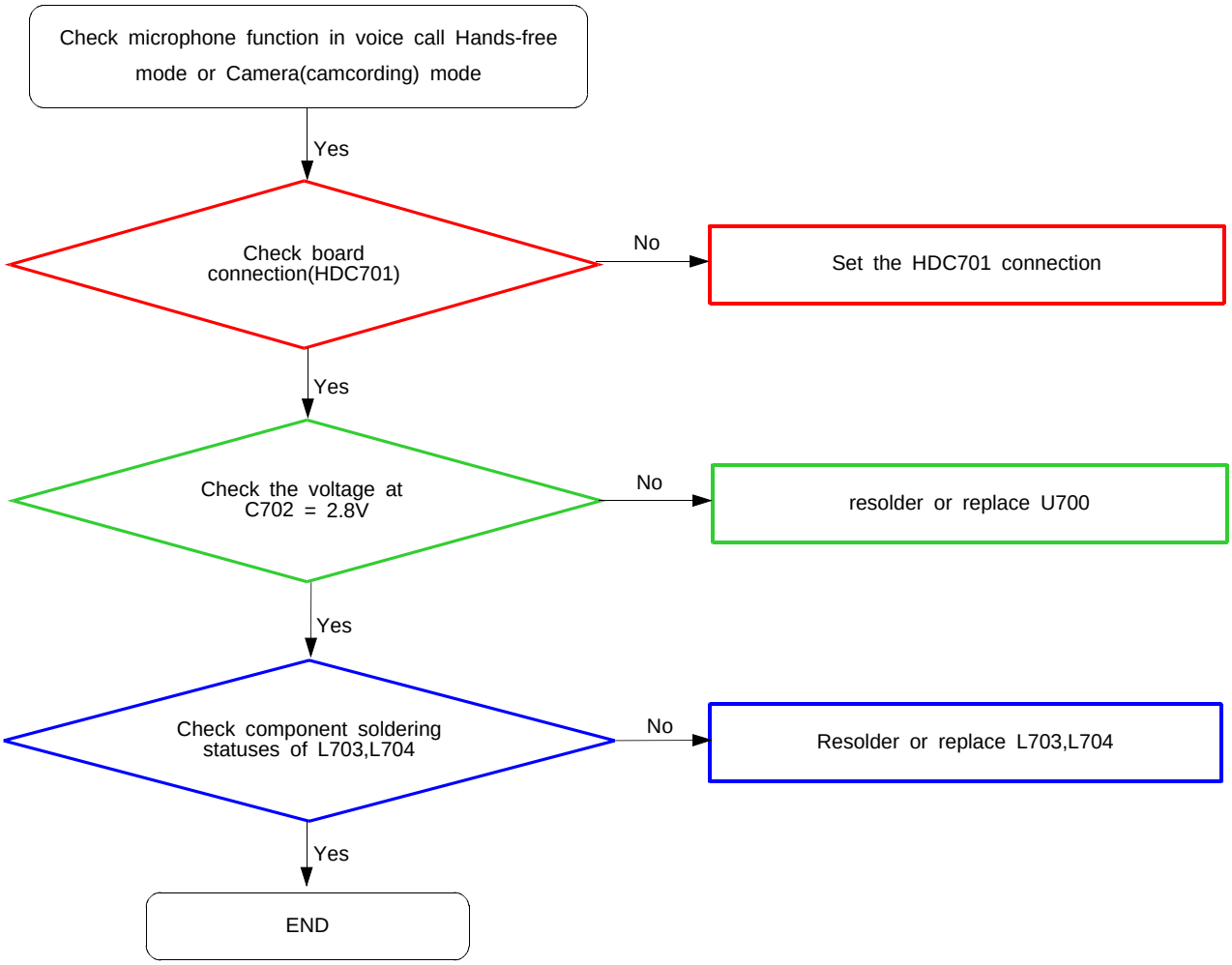

Confidential and proprietary-the contents in this service guide subject to change without prior notice.
Distribution, transmission, or infringement of any content or data from this document without Samsung's written authorization is strictly prohibited.

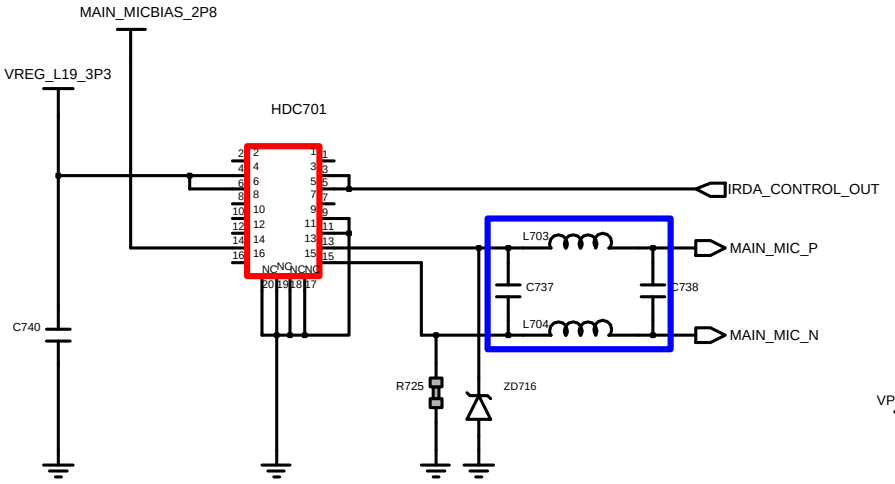

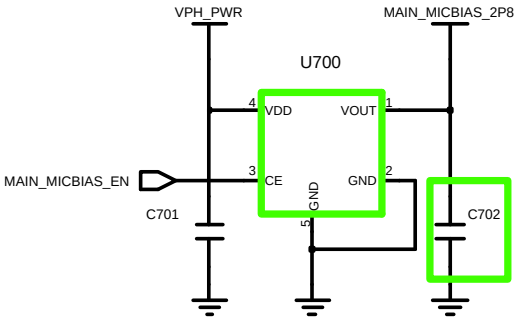

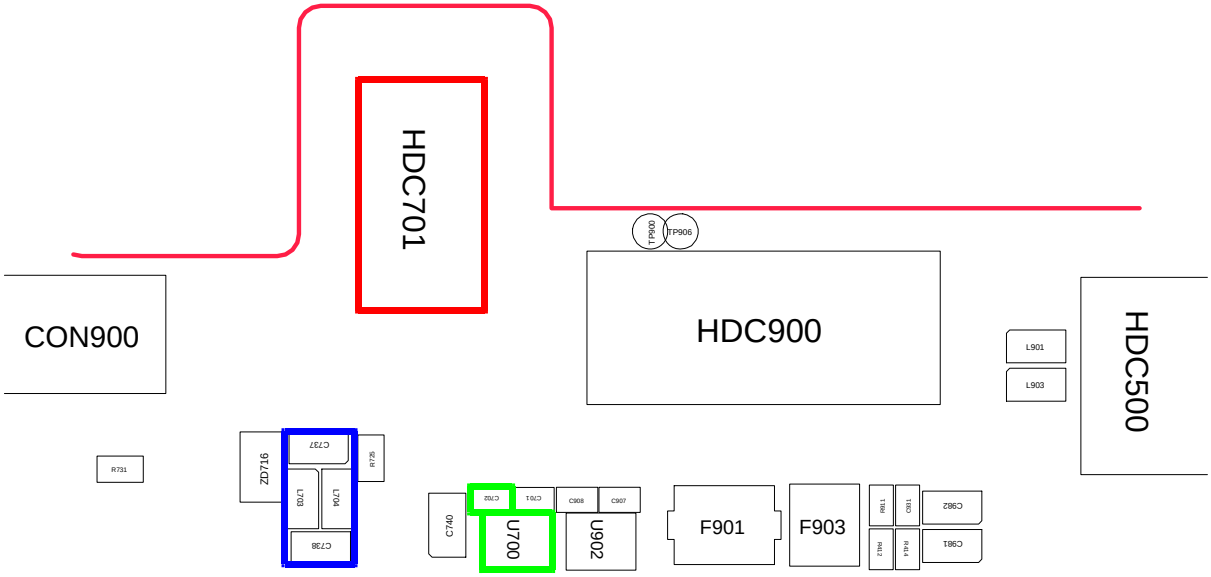

Confidential and proprietary-the contents in this service guide subject to change without prior notice.
Distribution, transmission, or infringement of any content or data from this document without Samsung's written authorization is strictly prohibited.

8-3-6-1. Speaker Part (LEFT)

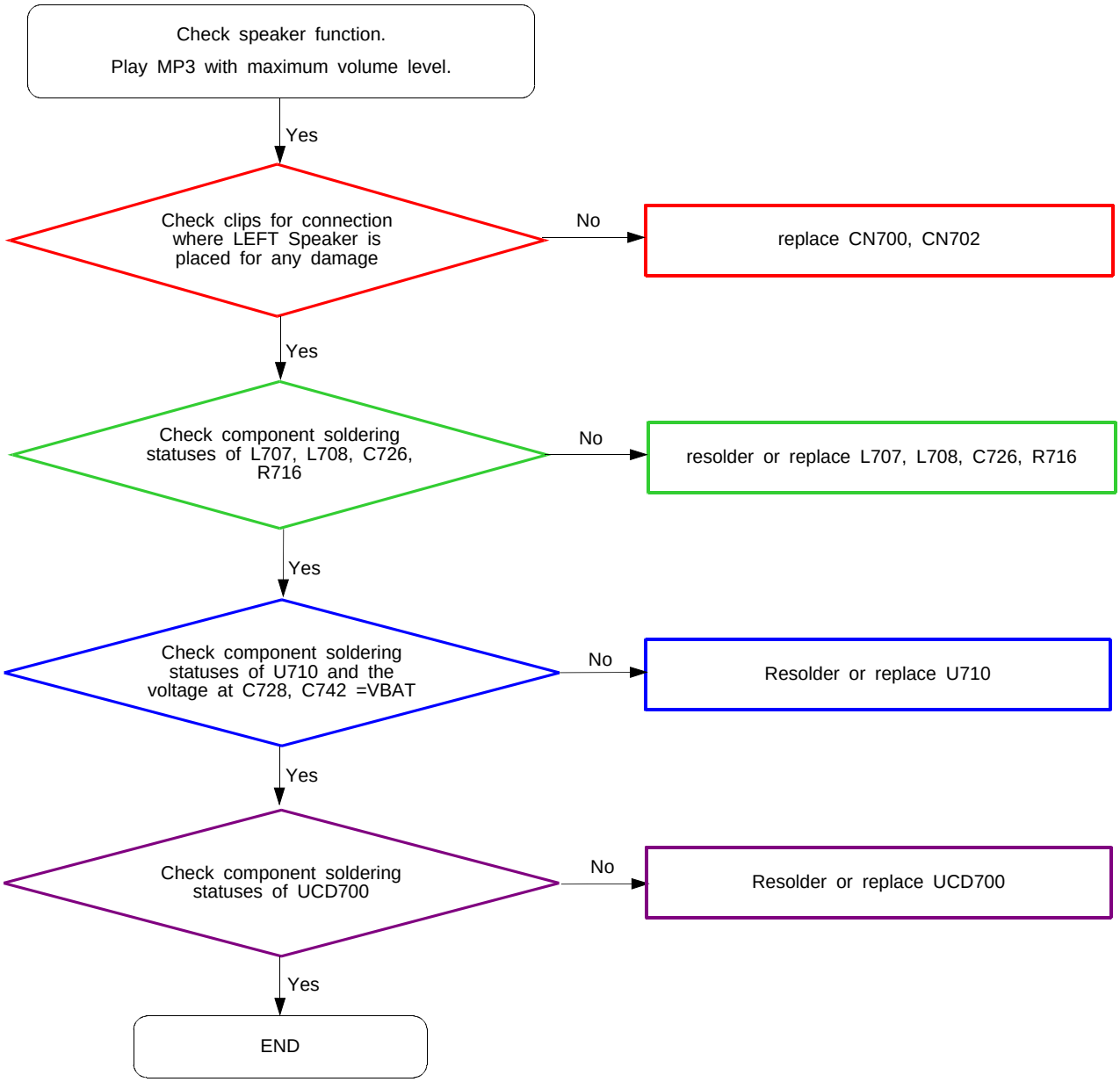

Confidential and proprietary-the contents in this service guide subject to change without prior notice.
Distribution, transmission, or infringement of any content or data from this document without Samsung's written authorization is strictly prohibited.

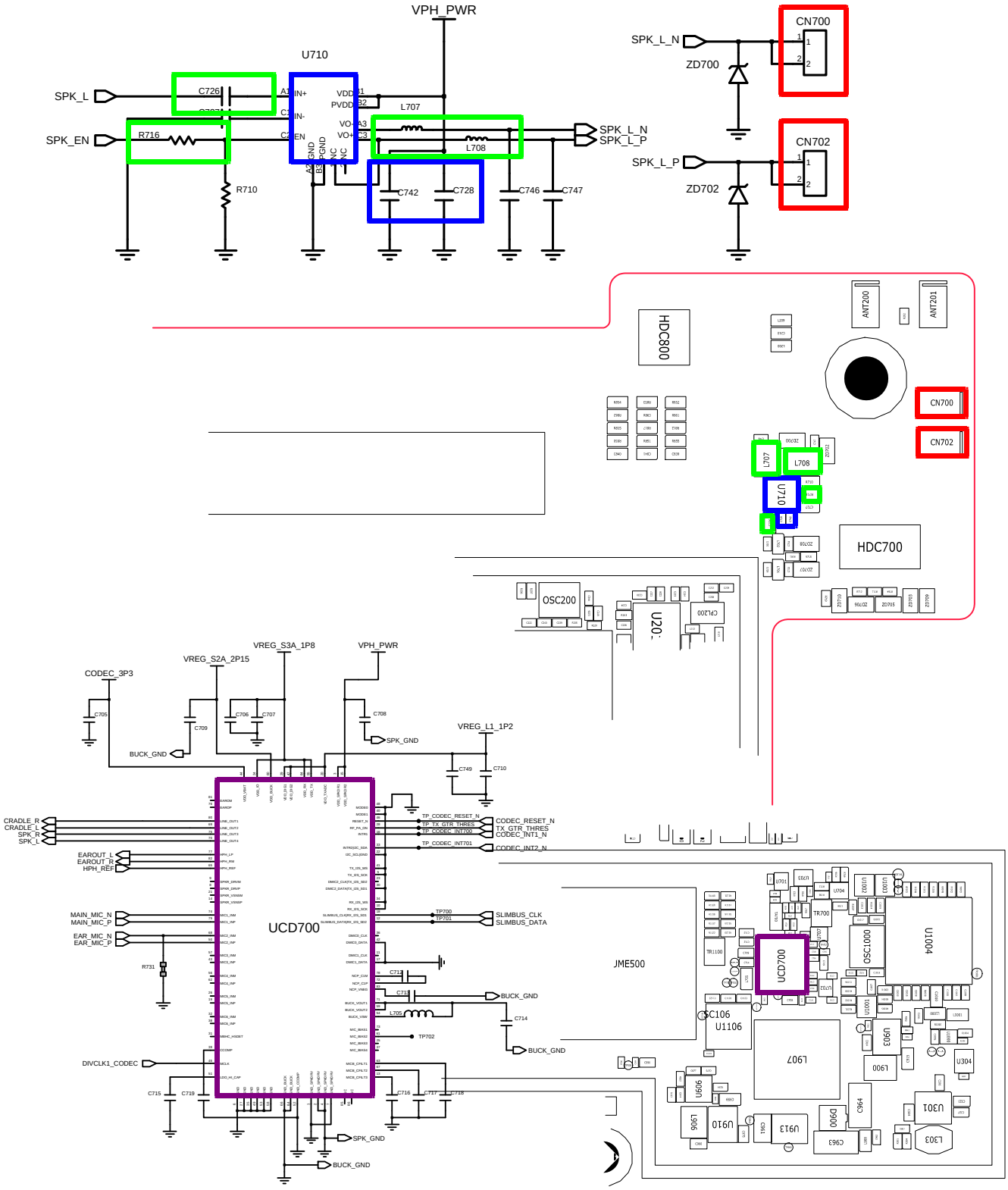

Confidential and proprietary-the contents in this service guide subject to change without prior notice.
Distribution, transmission, or infringement of any content or data from this document without Samsung's written authorization is strictly prohibited.

8-3-6-2. Speaker Part (RIGHT)

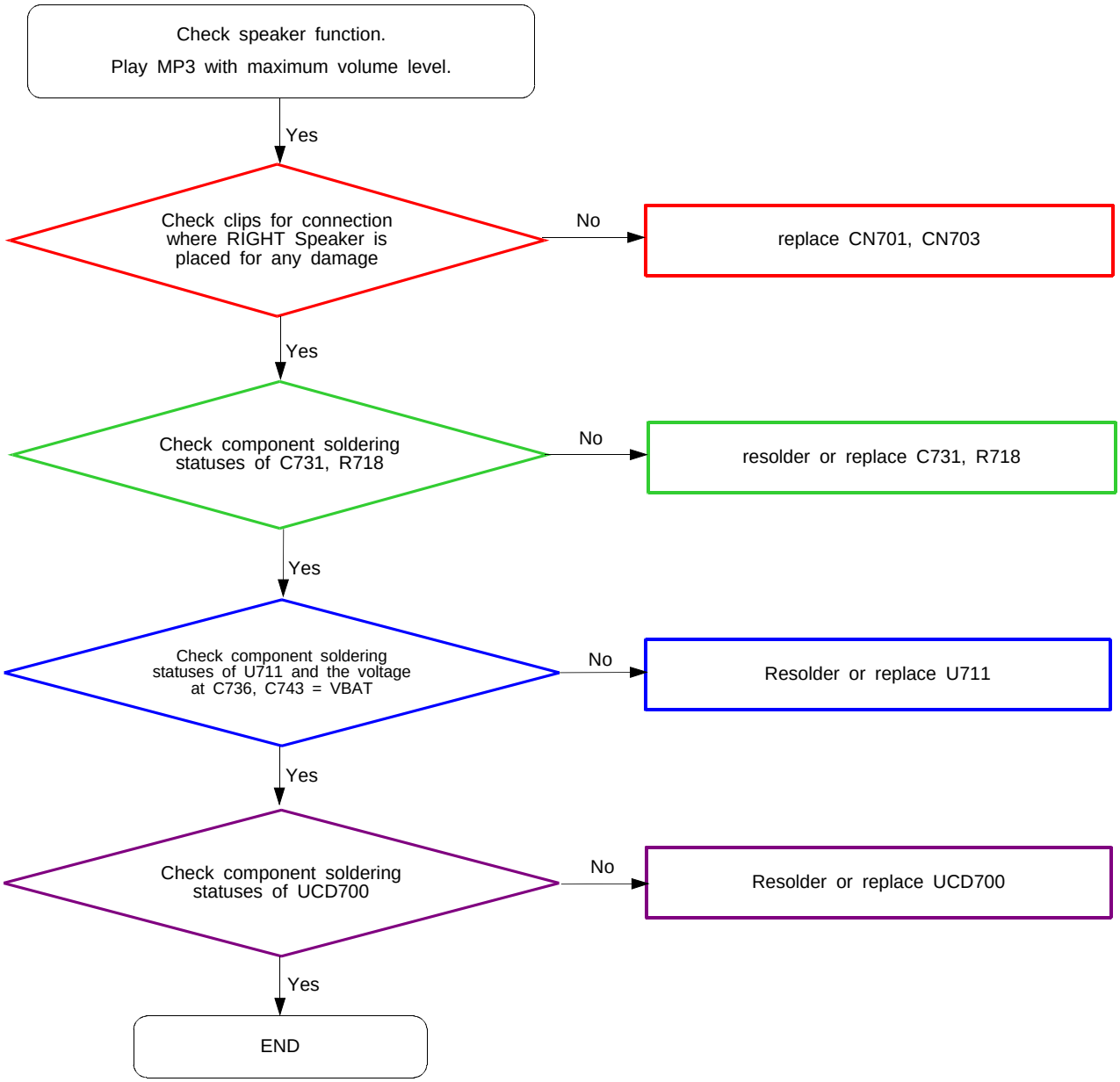

Confidential and proprietary-the contents in this service guide subject to change without prior notice.
Distribution, transmission, or infringement of any content or data from this document without Samsung's written authorization is strictly prohibited.

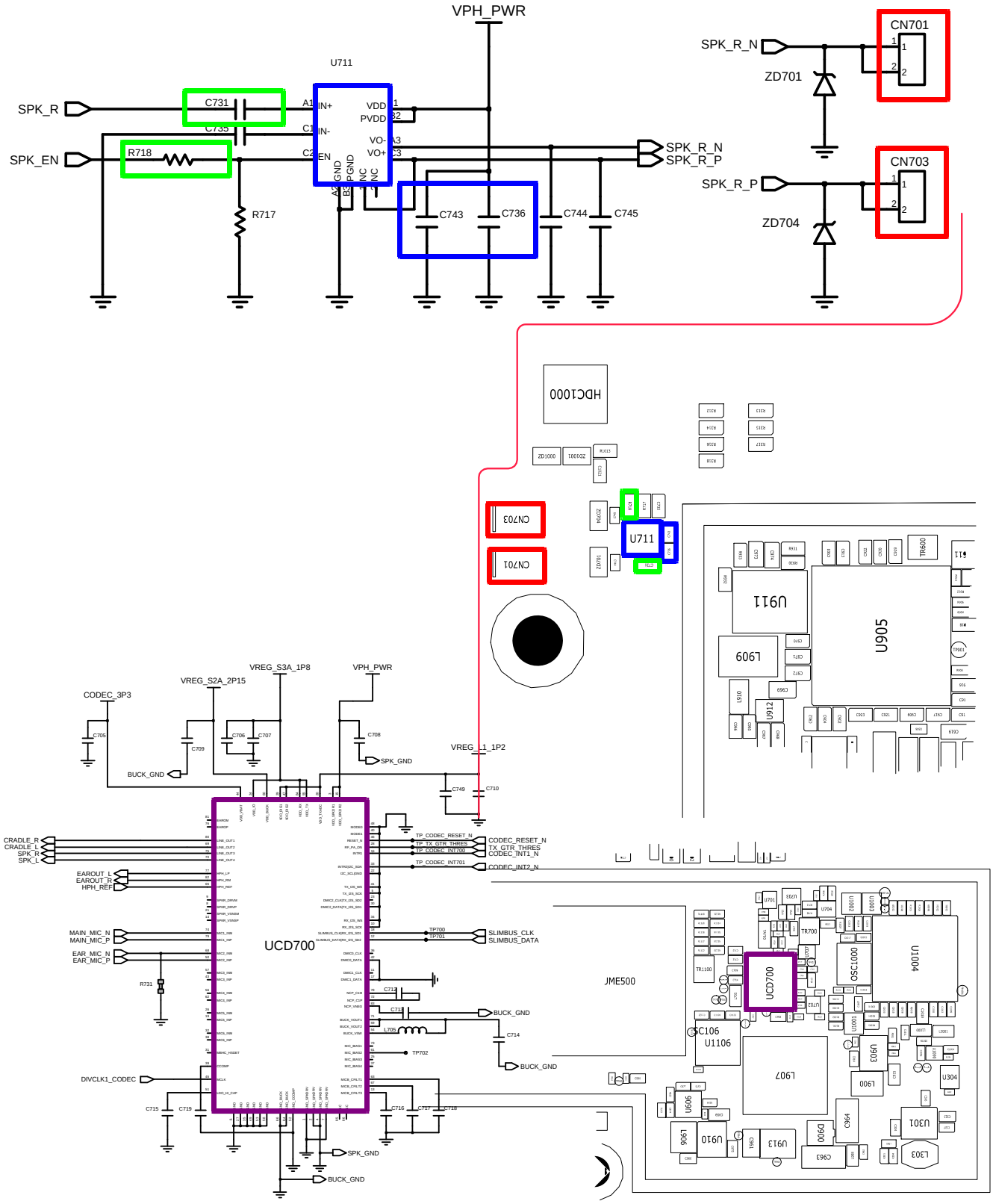

Confidential and proprietary-the contents in this service guide subject to change without prior notice.
Distribution, transmission, or infringement of any content or data from this document without Samsung's written authorization is strictly prohibited.

8-3-7. BT

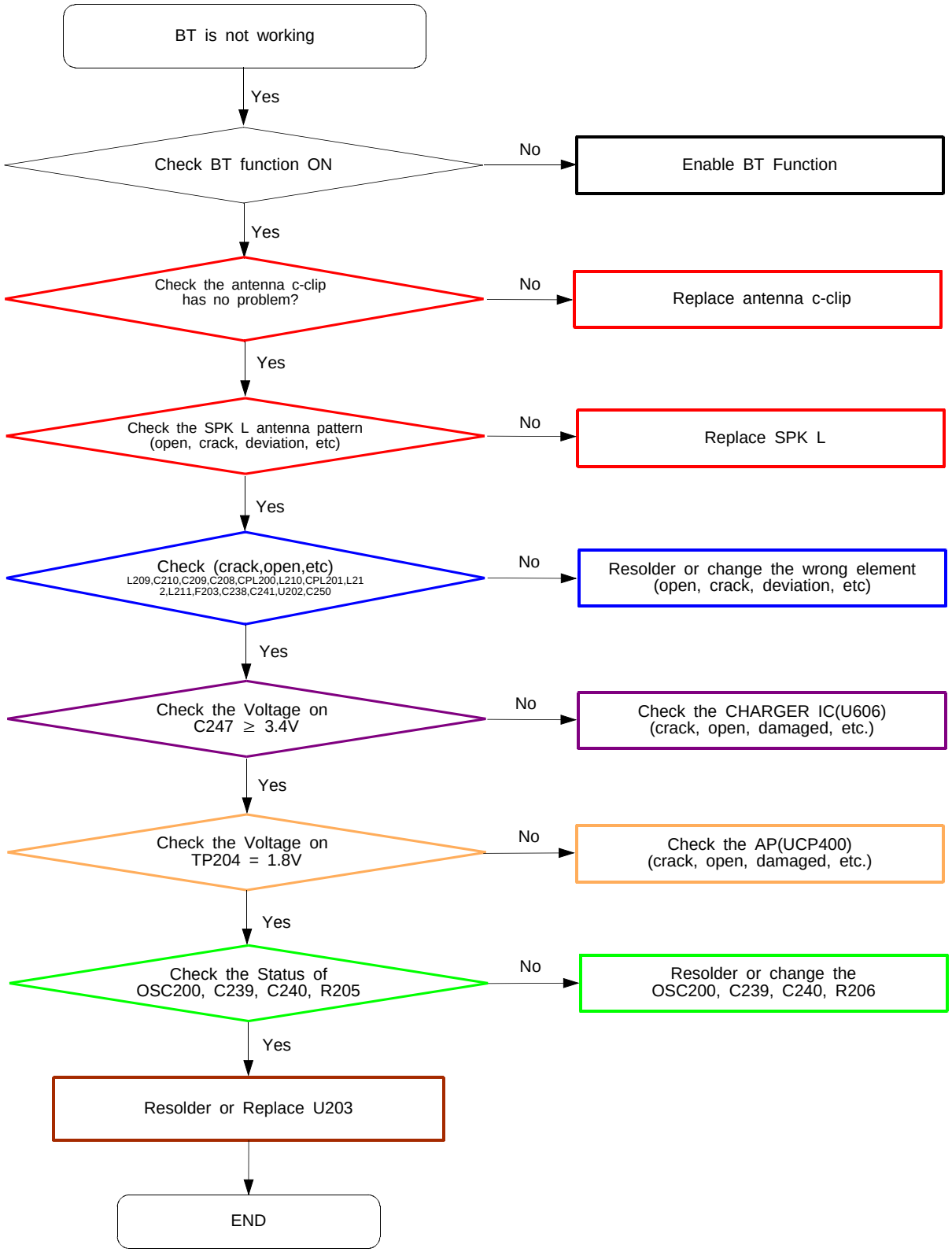

Confidential and proprietary-the contents in this service guide subject to change without prior notice.
Distribution, transmission, or infringement of any content or data from this document without Samsung's written authorization is strictly prohibited.

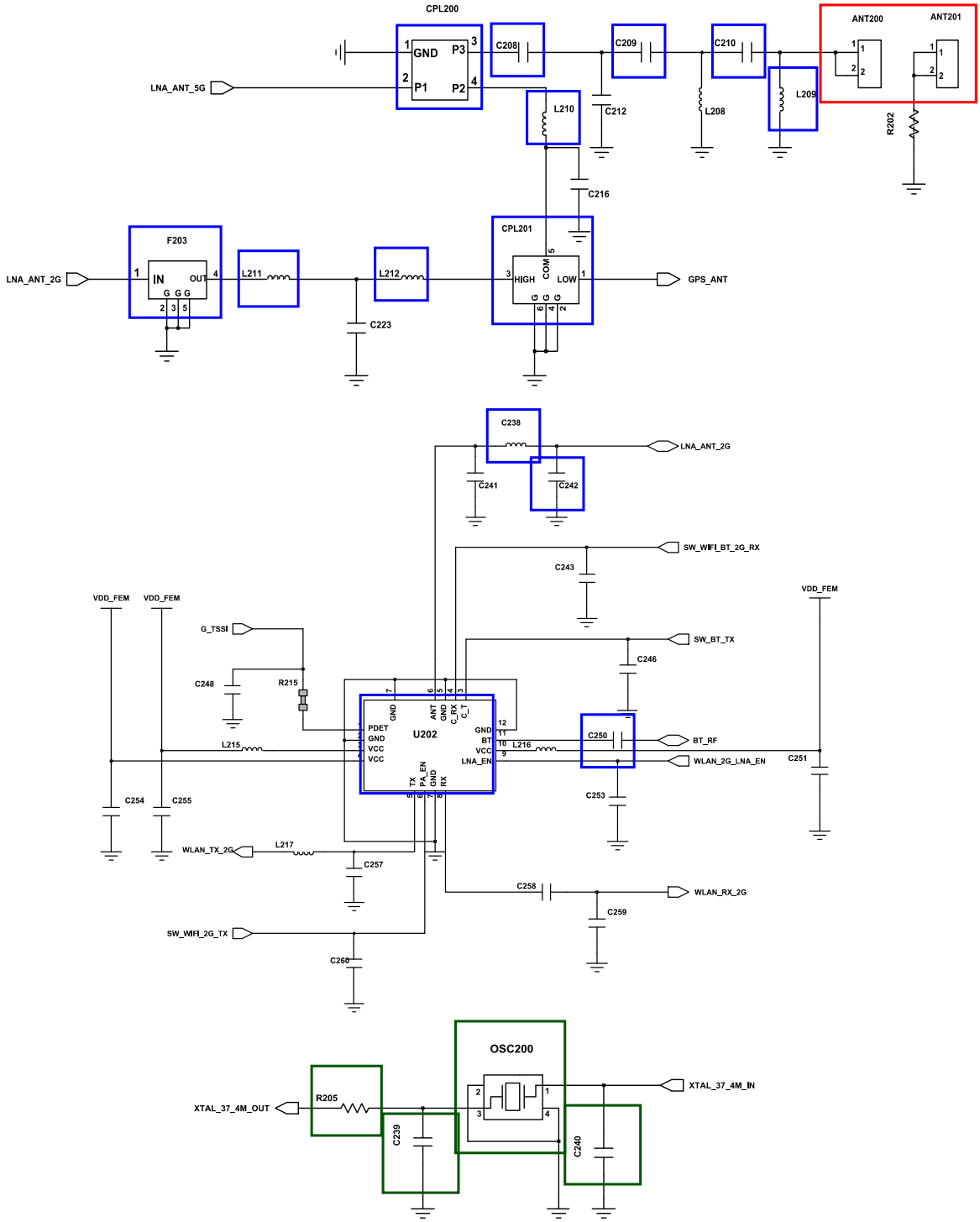

Confidential and proprietary-the contents in this service guide subject to change without prior notice.
Distribution, transmission, or infringement of any content or data from this document without Samsung's written authorization is strictly prohibited.

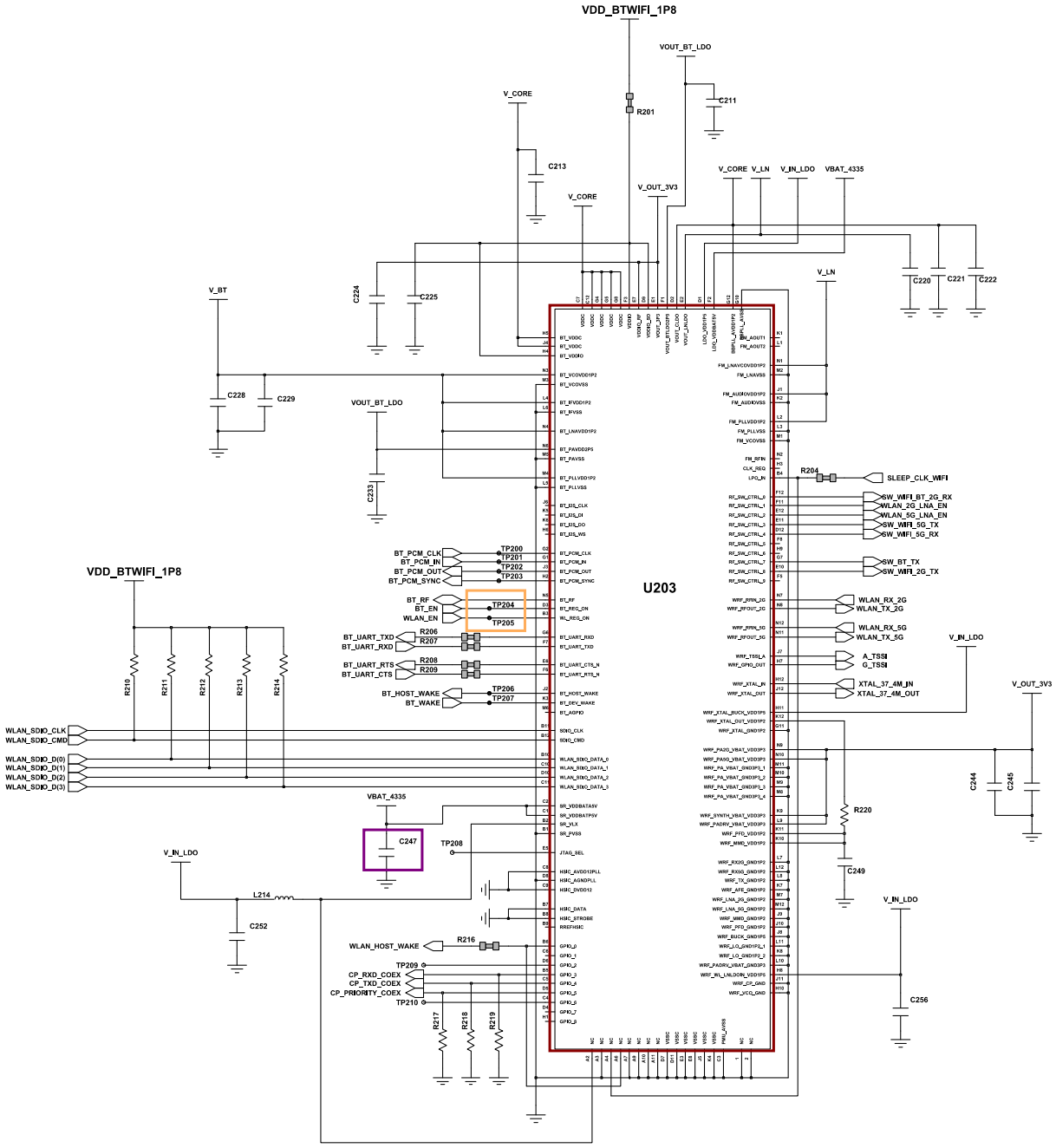

Confidential and proprietary-the contents in this service guide subject to change without prior notice.
Distribution, transmission, or infringement of any content or data from this document without Samsung's written authorization is strictly prohibited.

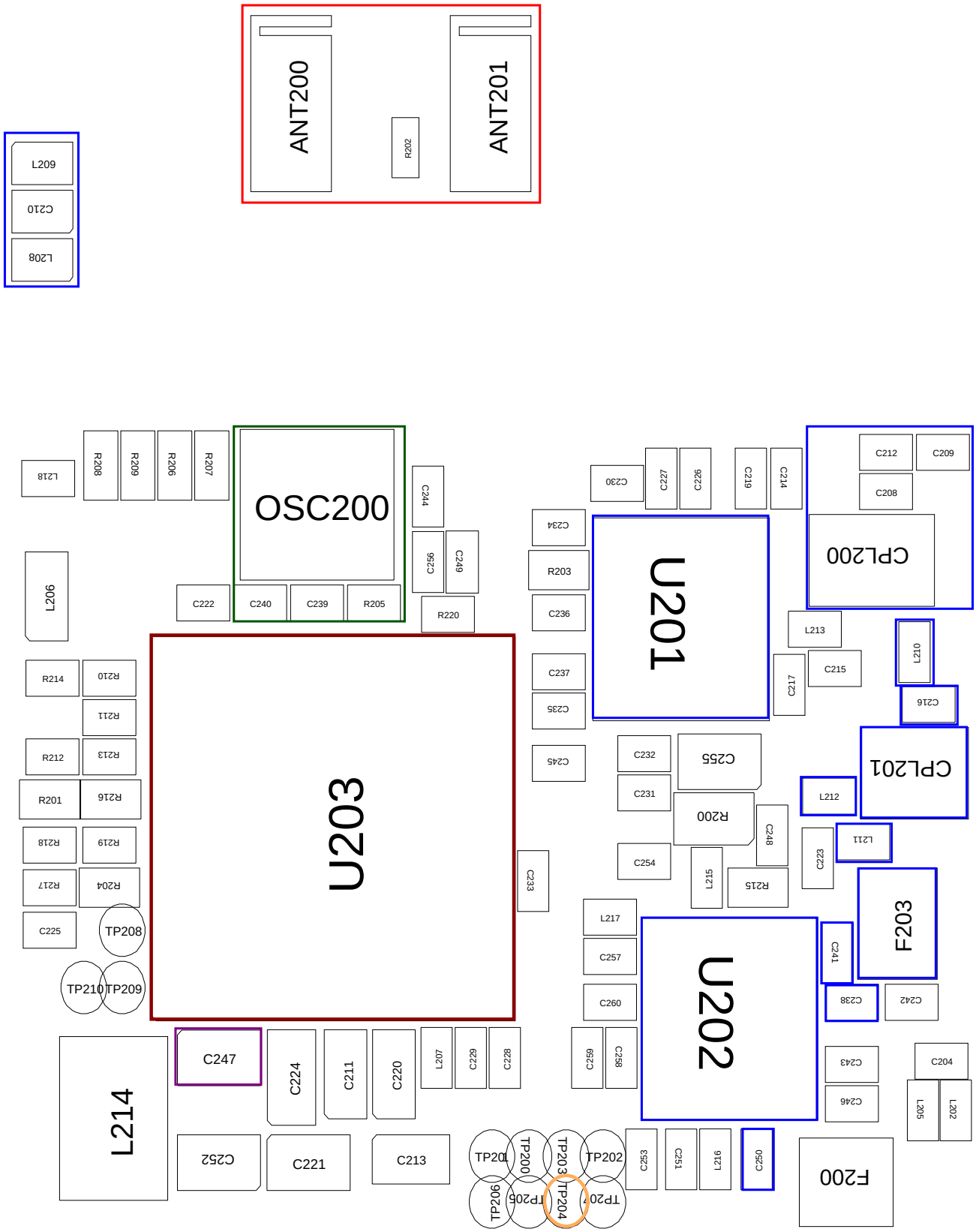

Confidential and proprietary-the contents in this service guide subject to change without prior notice.
Distribution, transmission, or infringement of any content or data from this document without Samsung's written authorization is strictly prohibited.

8-3-8. WIFI

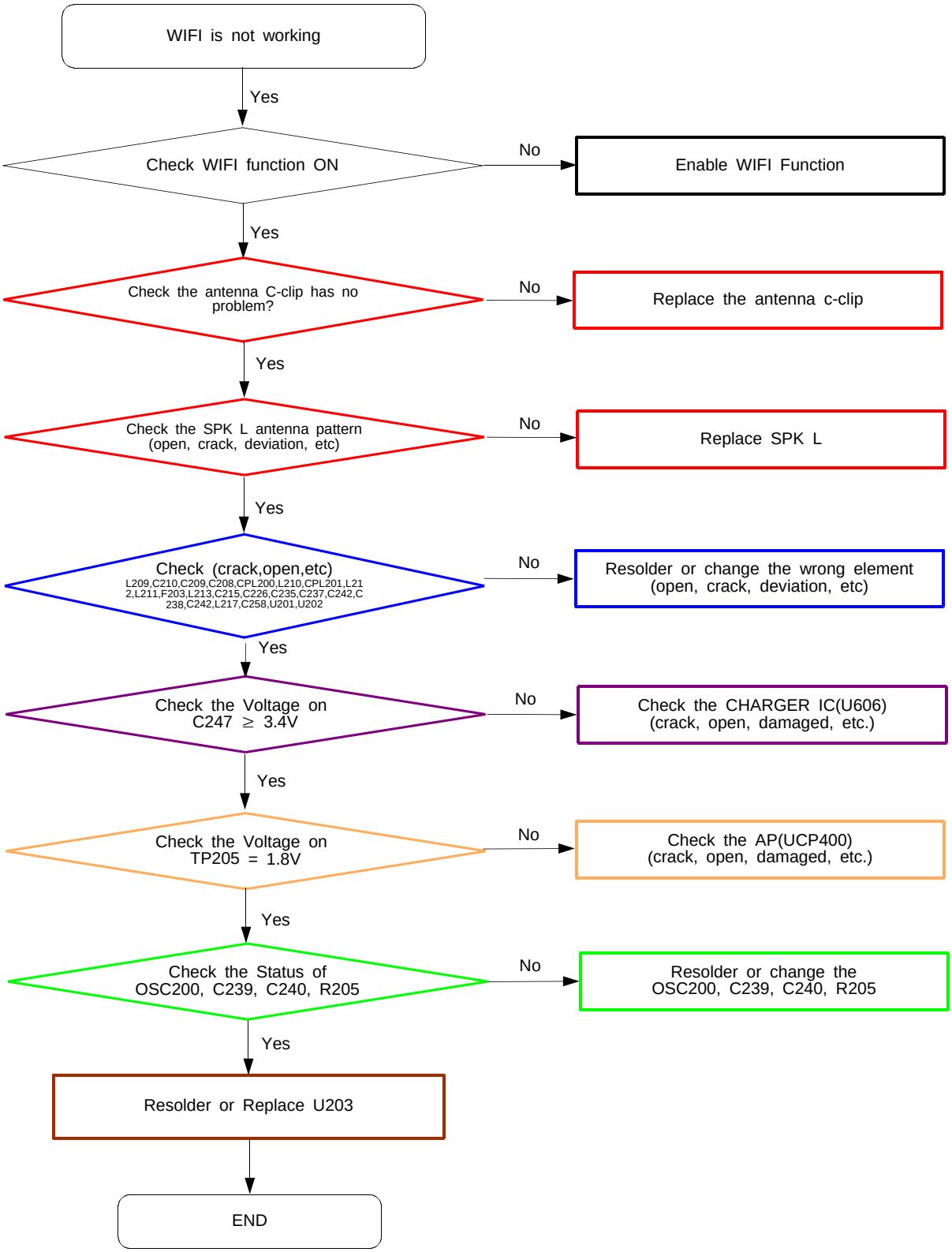

Confidential and proprietary-the contents in this service guide subject to change without prior notice.
Distribution, transmission, or infringement of any content or data from this document without Samsung's written authorization is strictly prohibited.

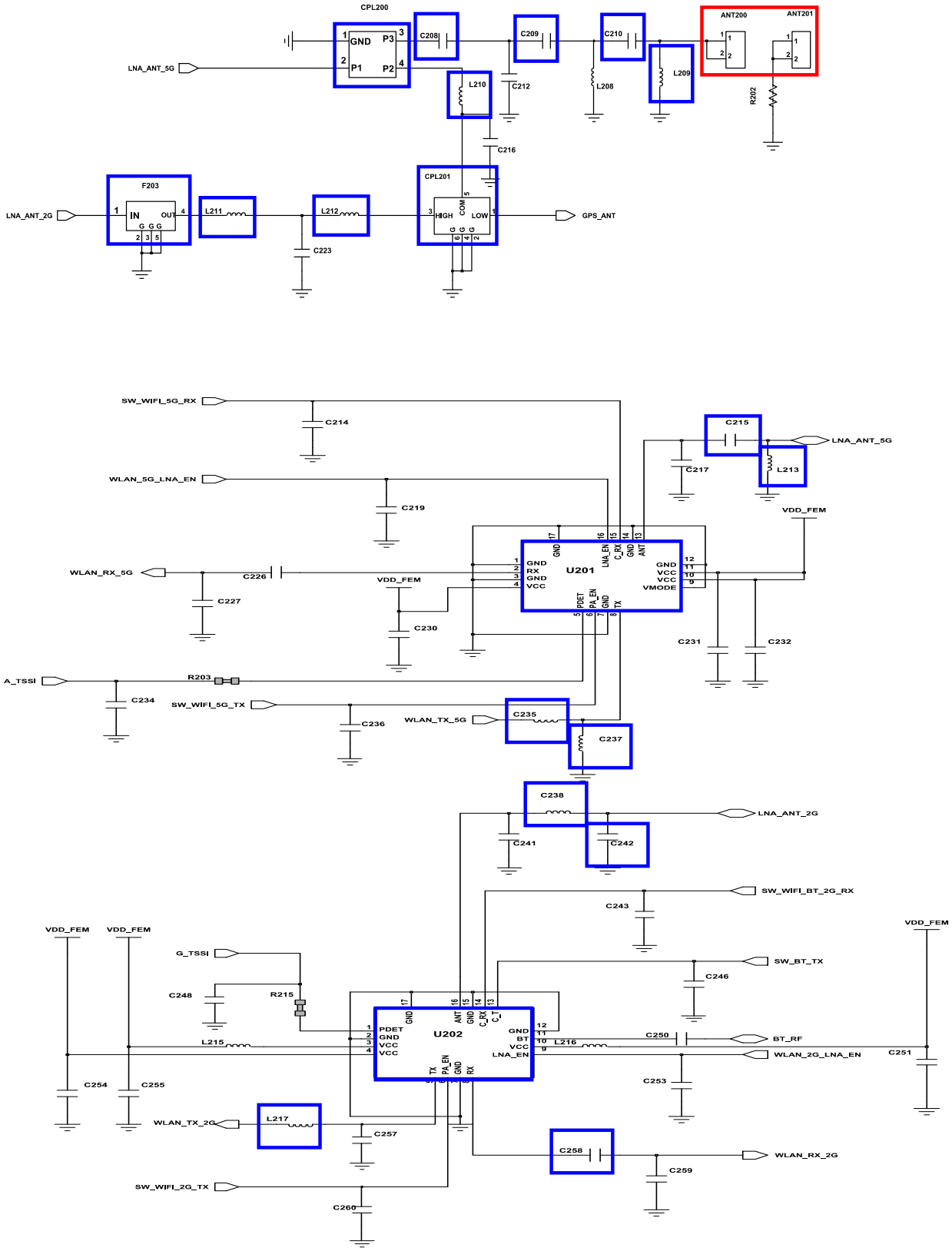

Confidential and proprietary-the contents in this service guide subject to change without prior notice.
Distribution, transmission, or infringement of any content or data from this document without Samsung's written authorization is strictly prohibited.

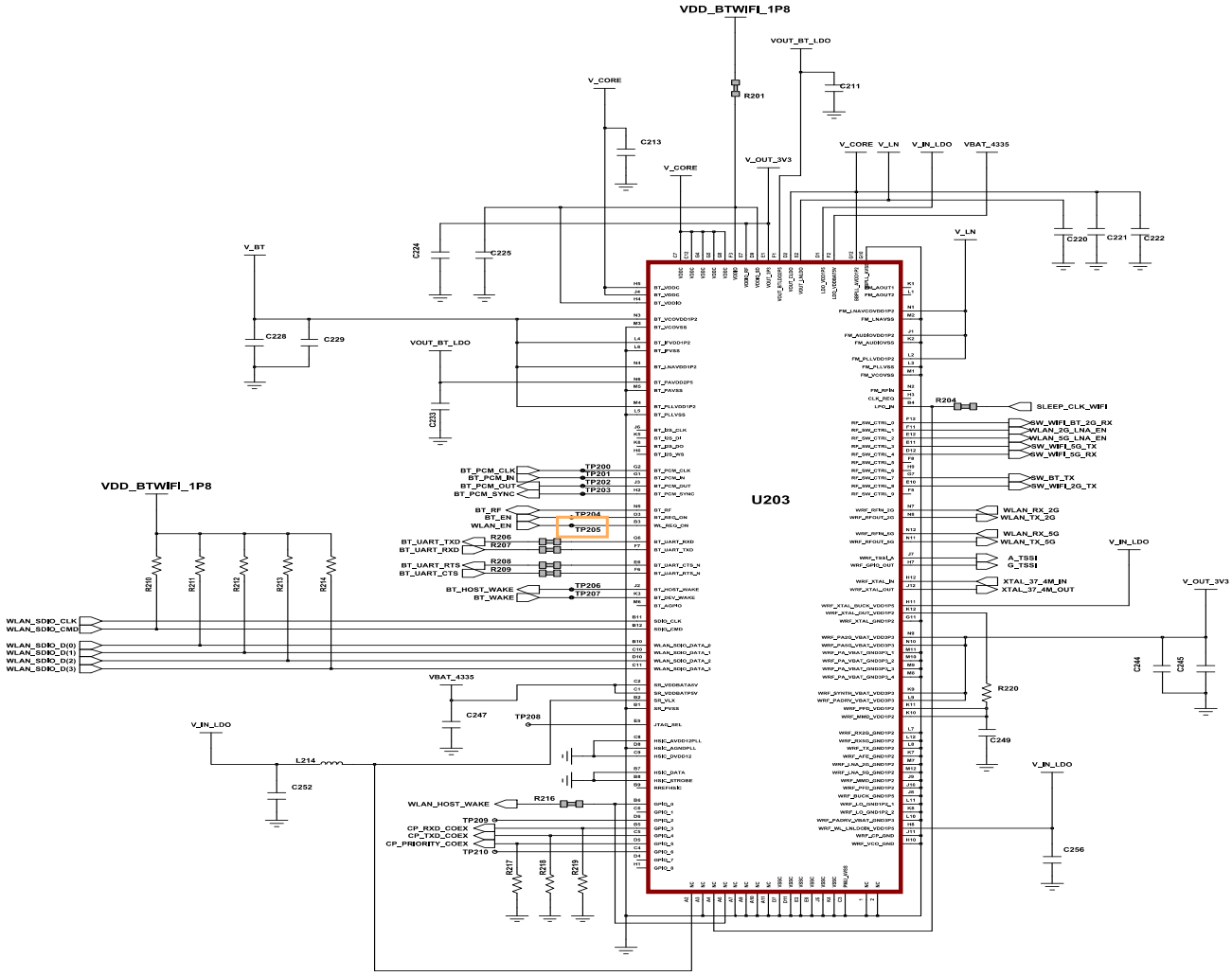

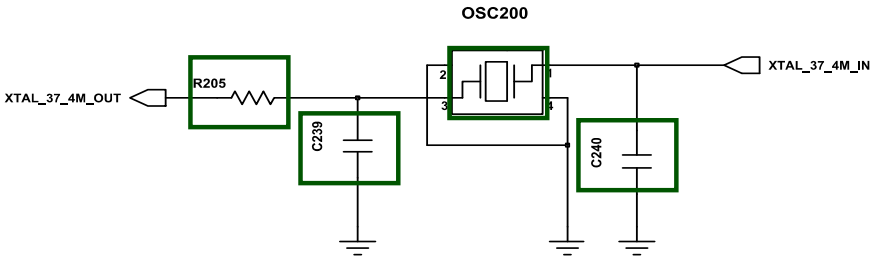

Confidential and proprietary-the contents in this service guide subject to change without prior notice.
Distribution, transmission, or infringement of any content or data from this document without Samsung's written authorization is strictly prohibited.

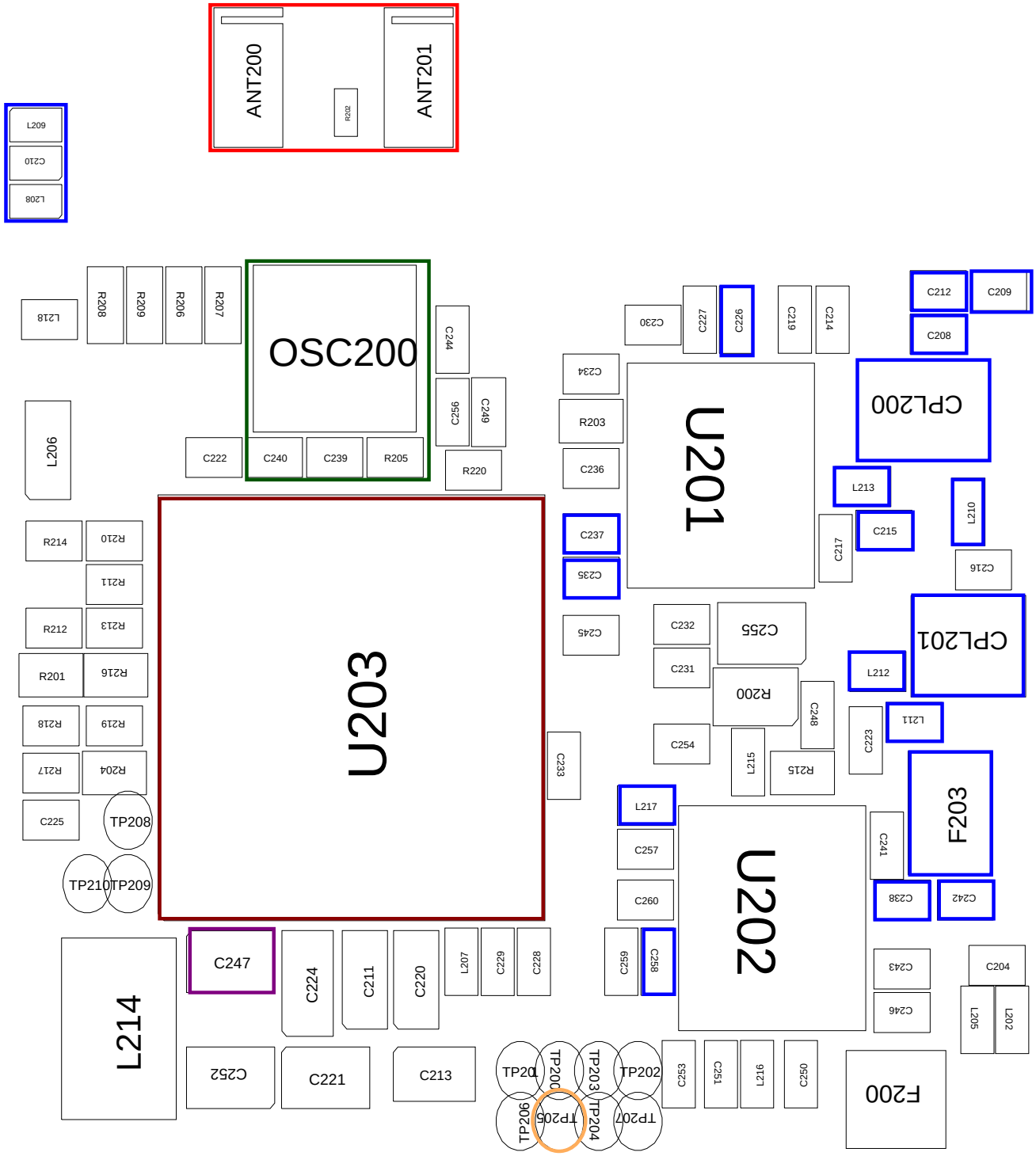

Confidential and proprietary-the contents in this service guide subject to change without prior notice.
Distribution, transmission, or infringement of any content or data from this document without Samsung's written authorization is strictly prohibited.

8-3-9. GPS

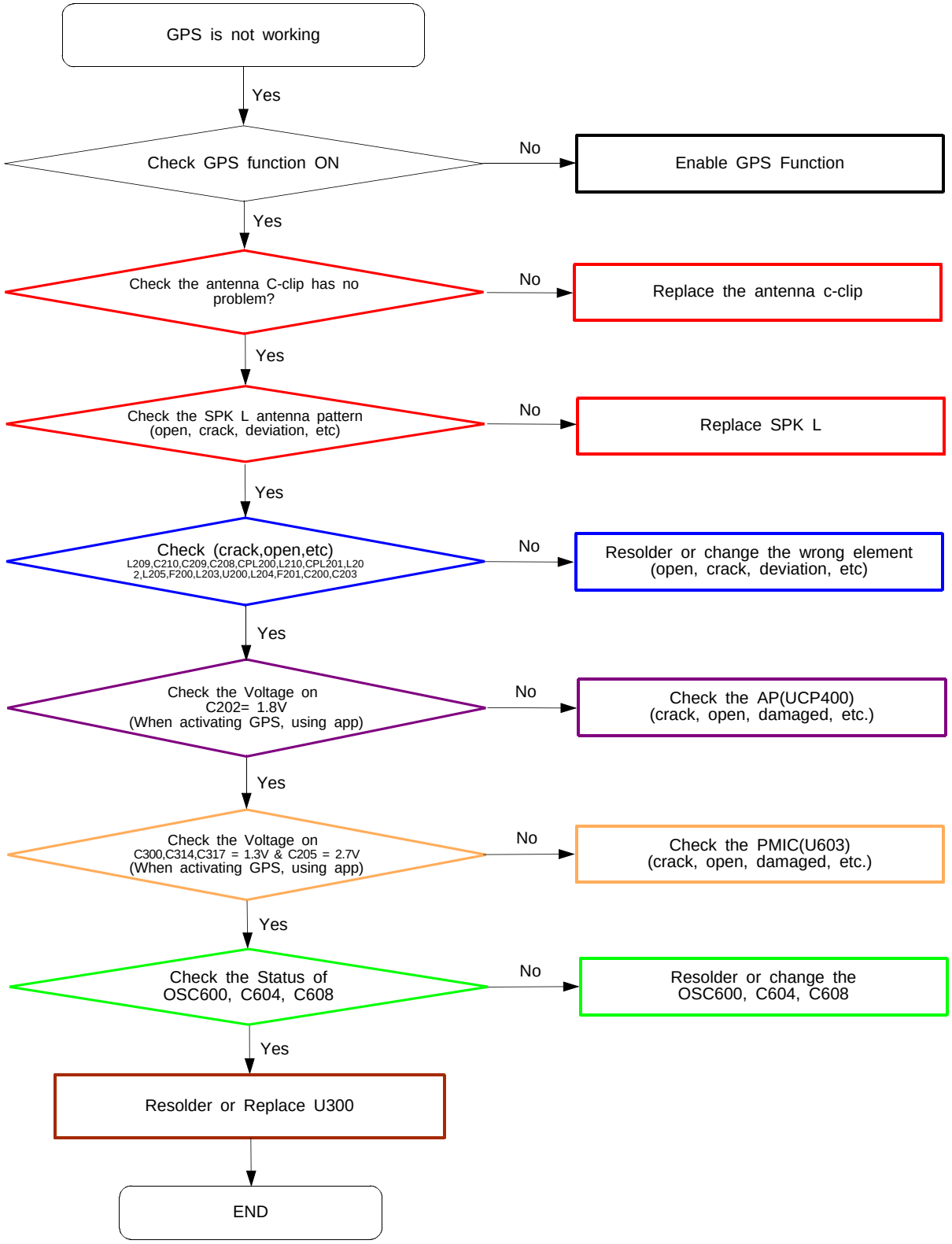

Confidential and proprietary-the contents in this service guide subject to change without prior notice.
Distribution, transmission, or infringement of any content or data from this document without Samsung's written authorization is strictly prohibited.

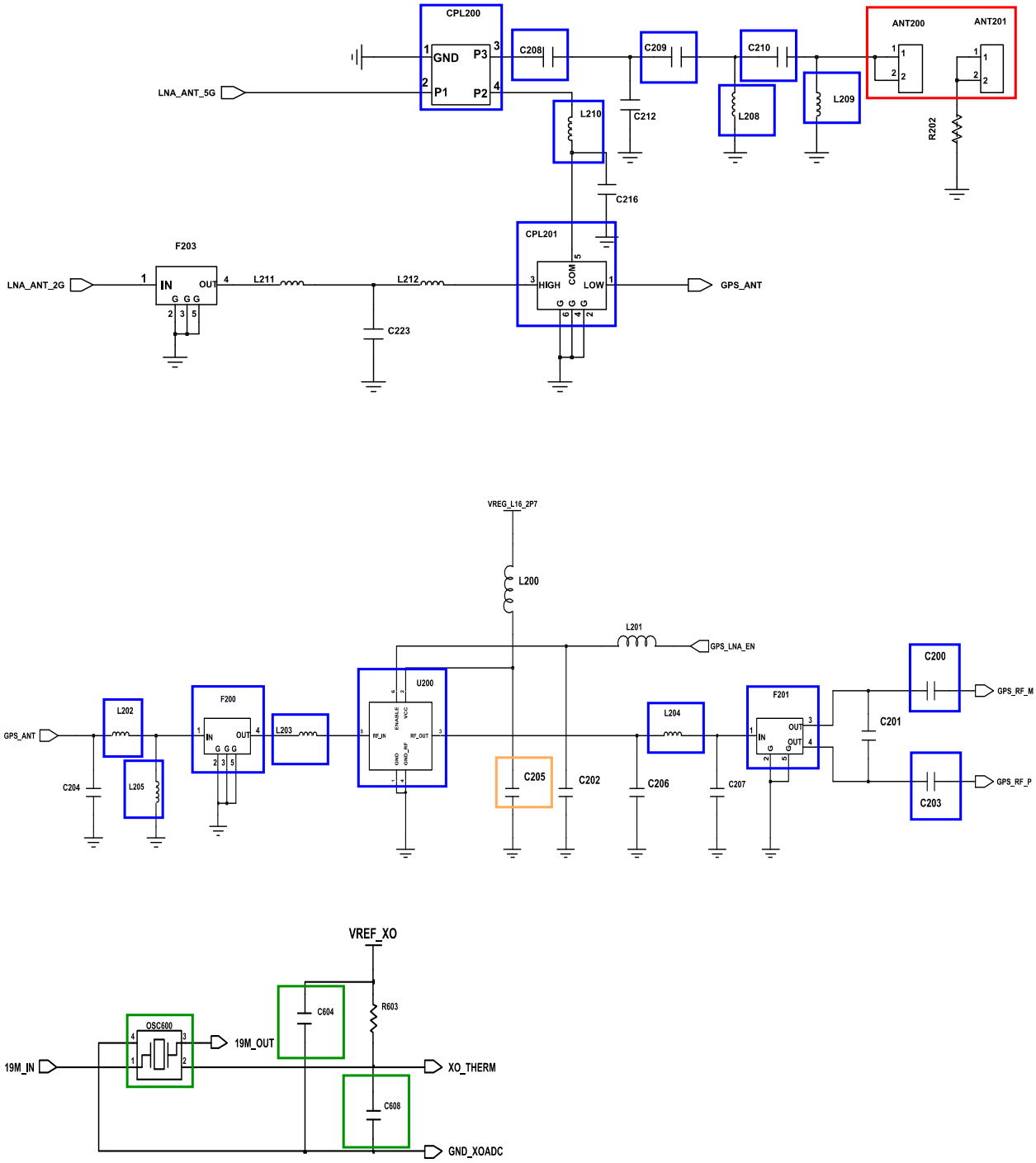

Confidential and proprietary-the contents in this service guide subject to change without prior notice.
Distribution, transmission, or infringement of any content or data from this document without Samsung's written authorization is strictly prohibited.

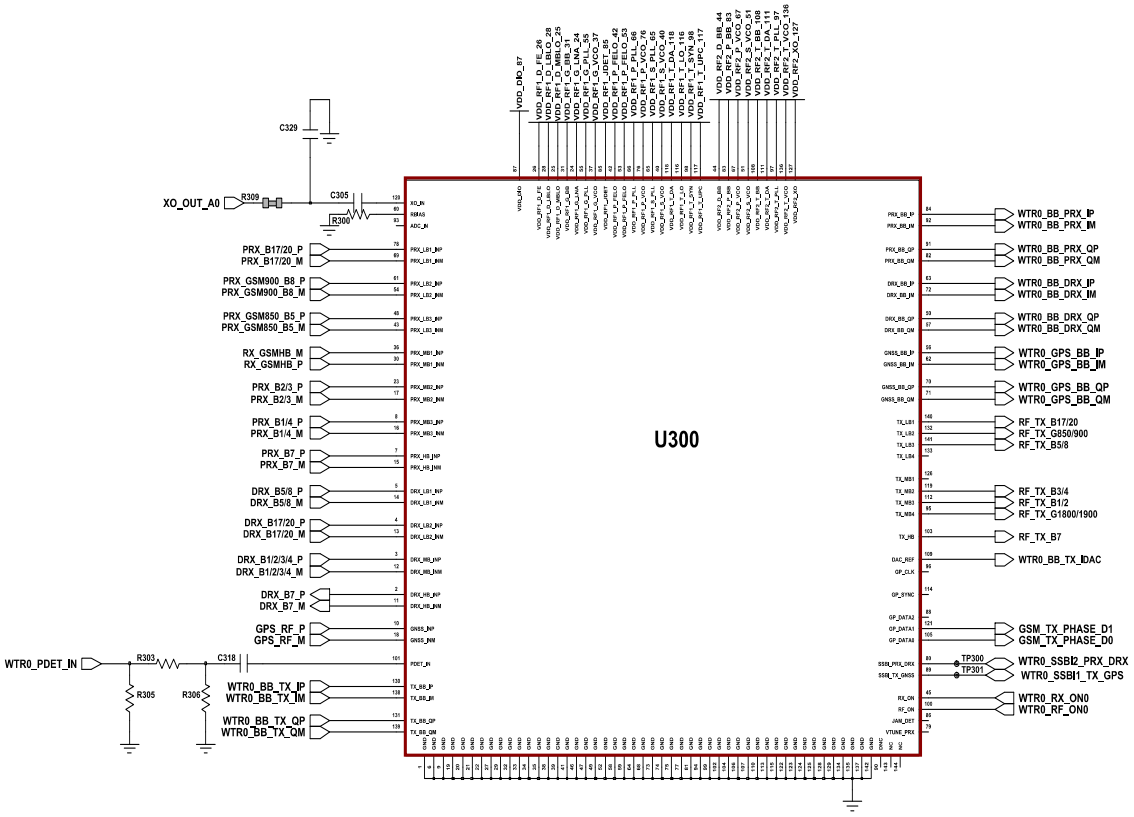

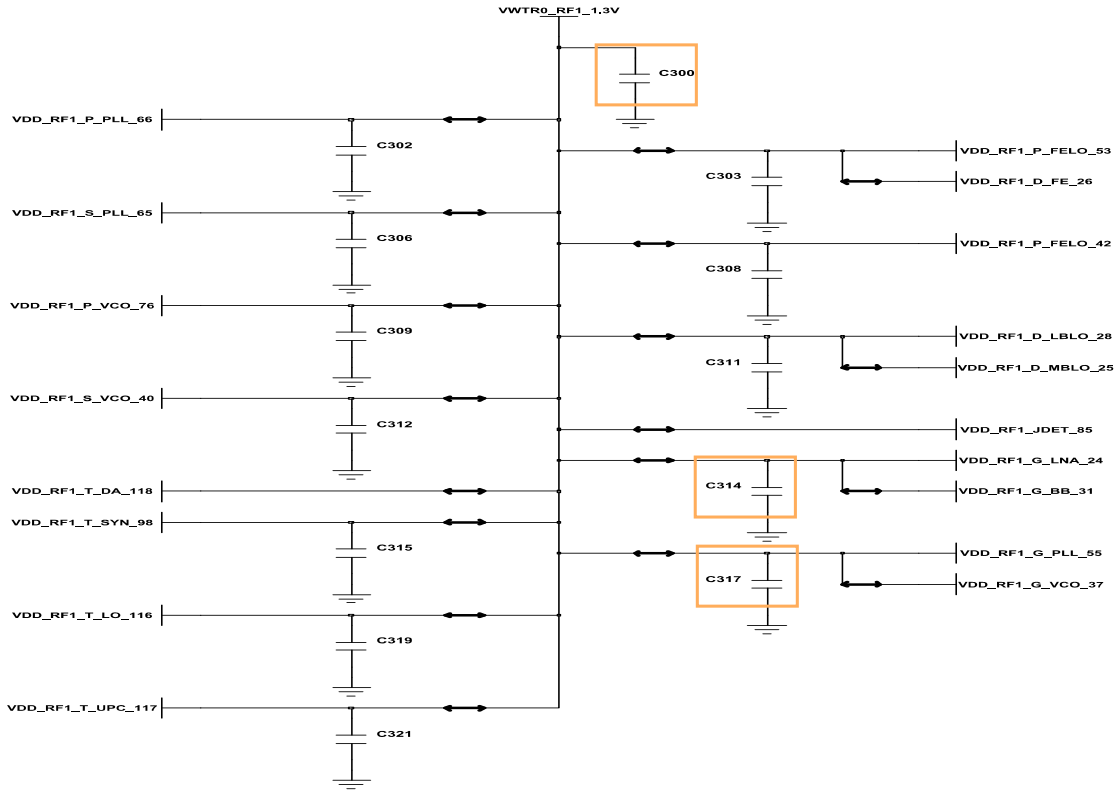

Confidential and proprietary-the contents in this service guide subject to change without prior notice.
Distribution, transmission, or infringement of any content or data from this document without Samsung's written authorization is strictly prohibited.

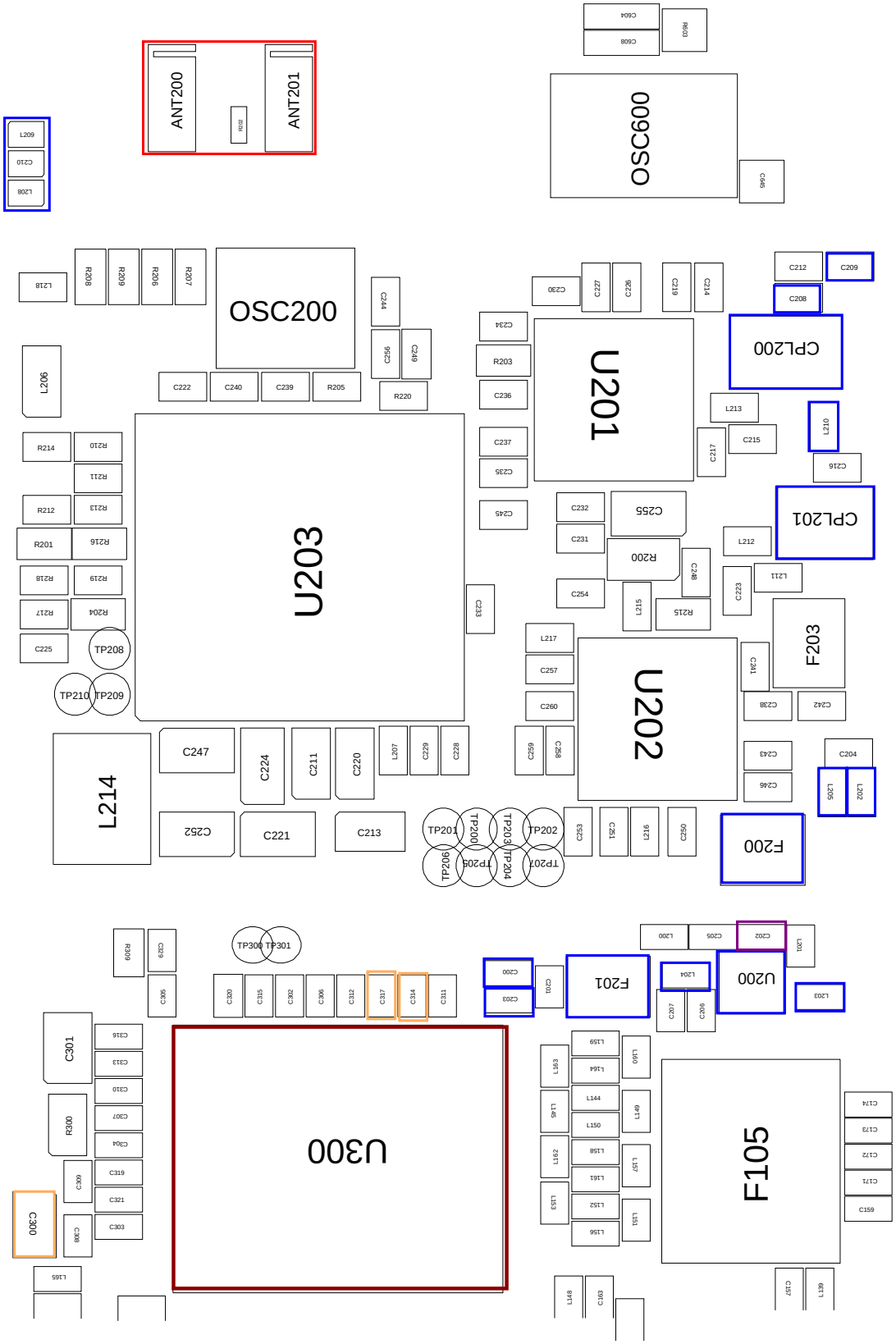

Confidential and proprietary-the contents in this service guide subject to change without prior notice.
Distribution, transmission, or infringement of any content or data from this document without Samsung's written authorization is strictly prohibited.

8-3-10. LCD

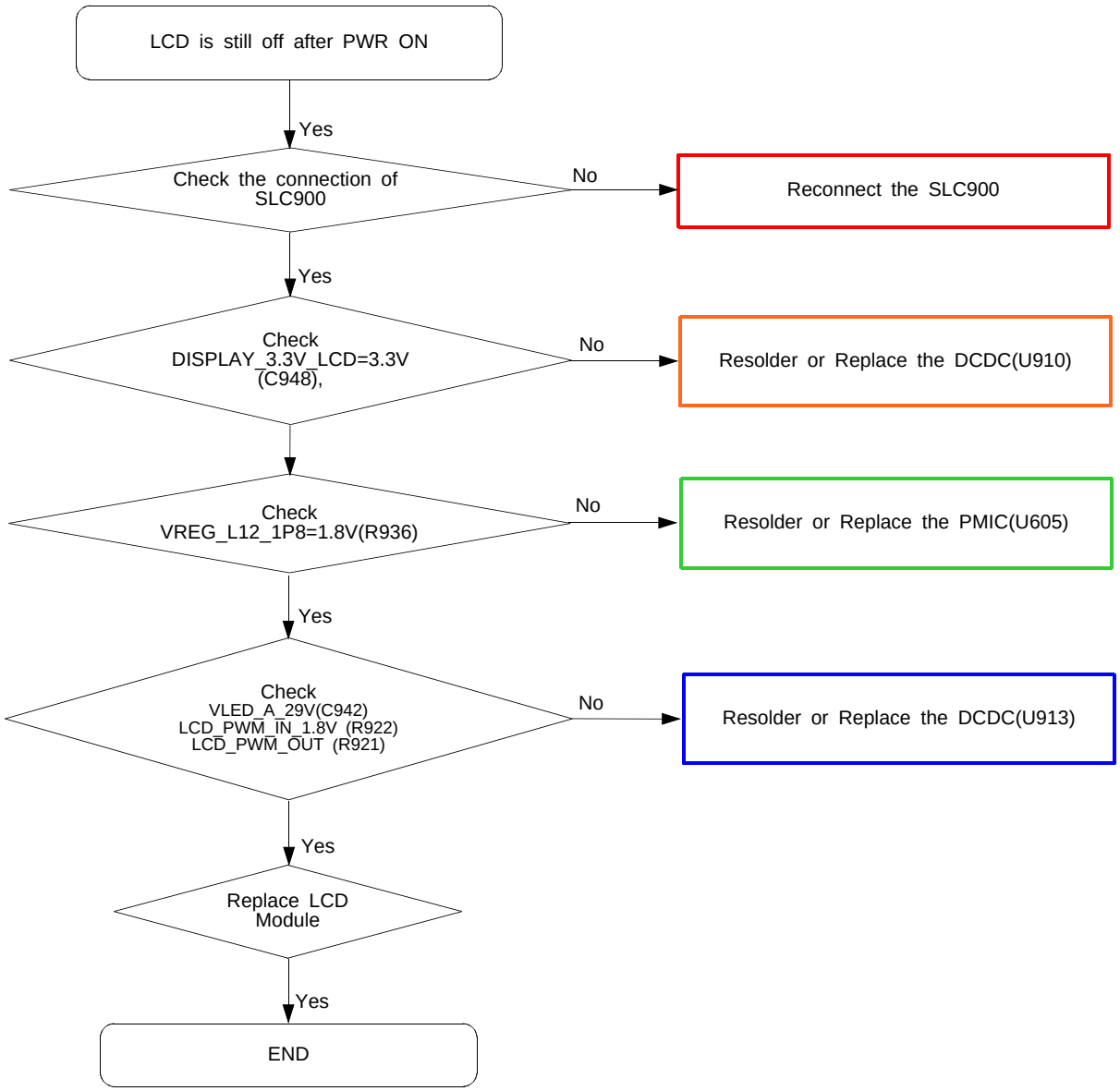

Confidential and proprietary-the contents in this service guide subject to change without prior notice.
Distribution, transmission, or infringement of any content or data from this document without Samsung's written authorization is strictly prohibited.

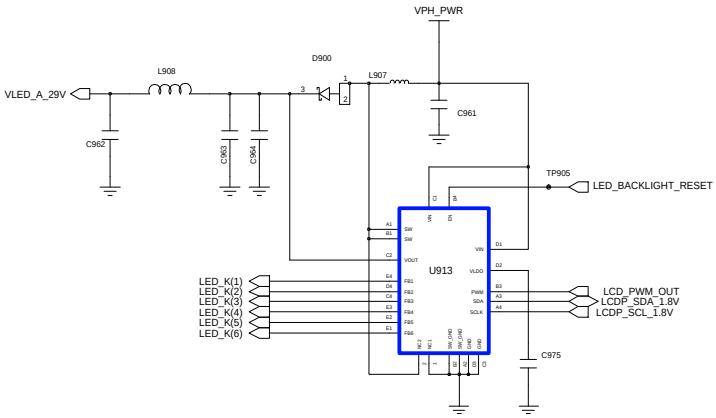

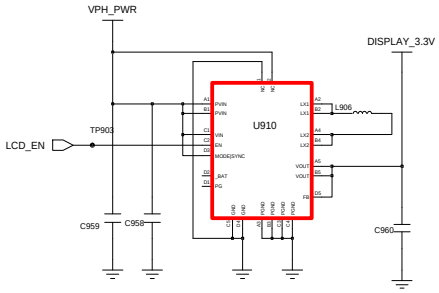

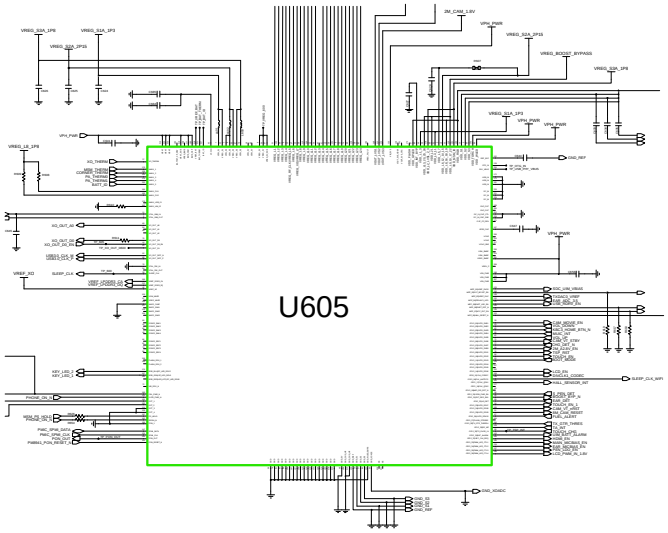

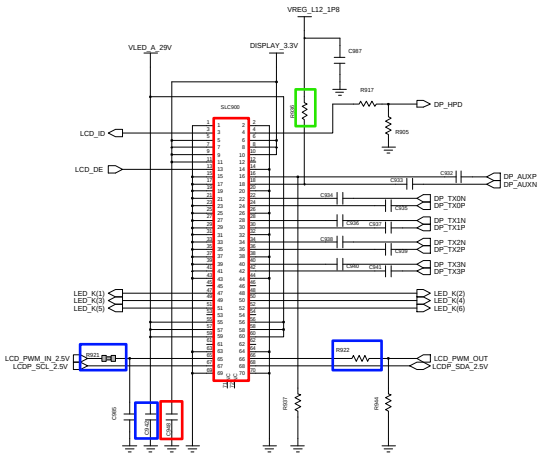

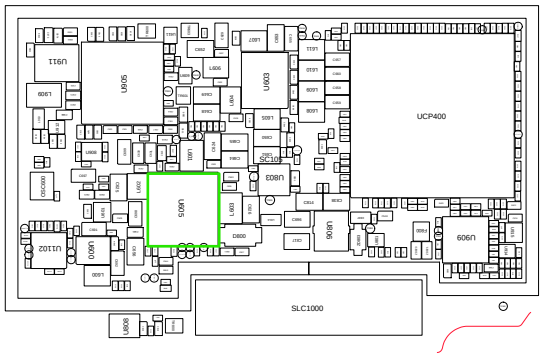

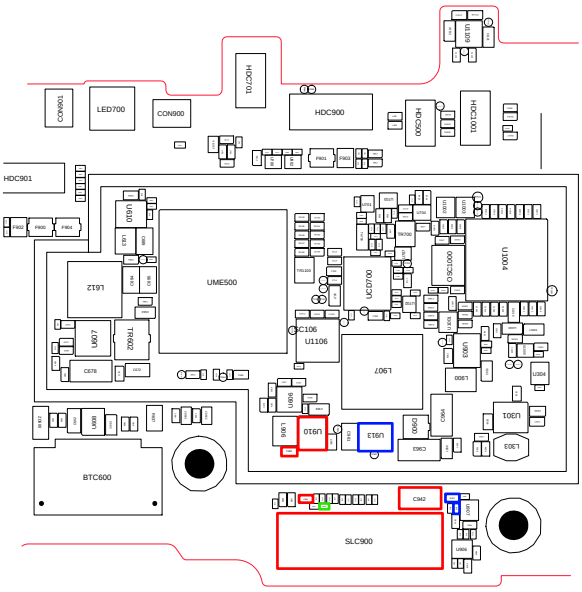

Confidential and proprietary-the contents in this service guide subject to change without prior notice.
Distribution, transmission, or infringement of any content or data from this document without Samsung's written authorization is strictly prohibited.

8-3-11. TSP

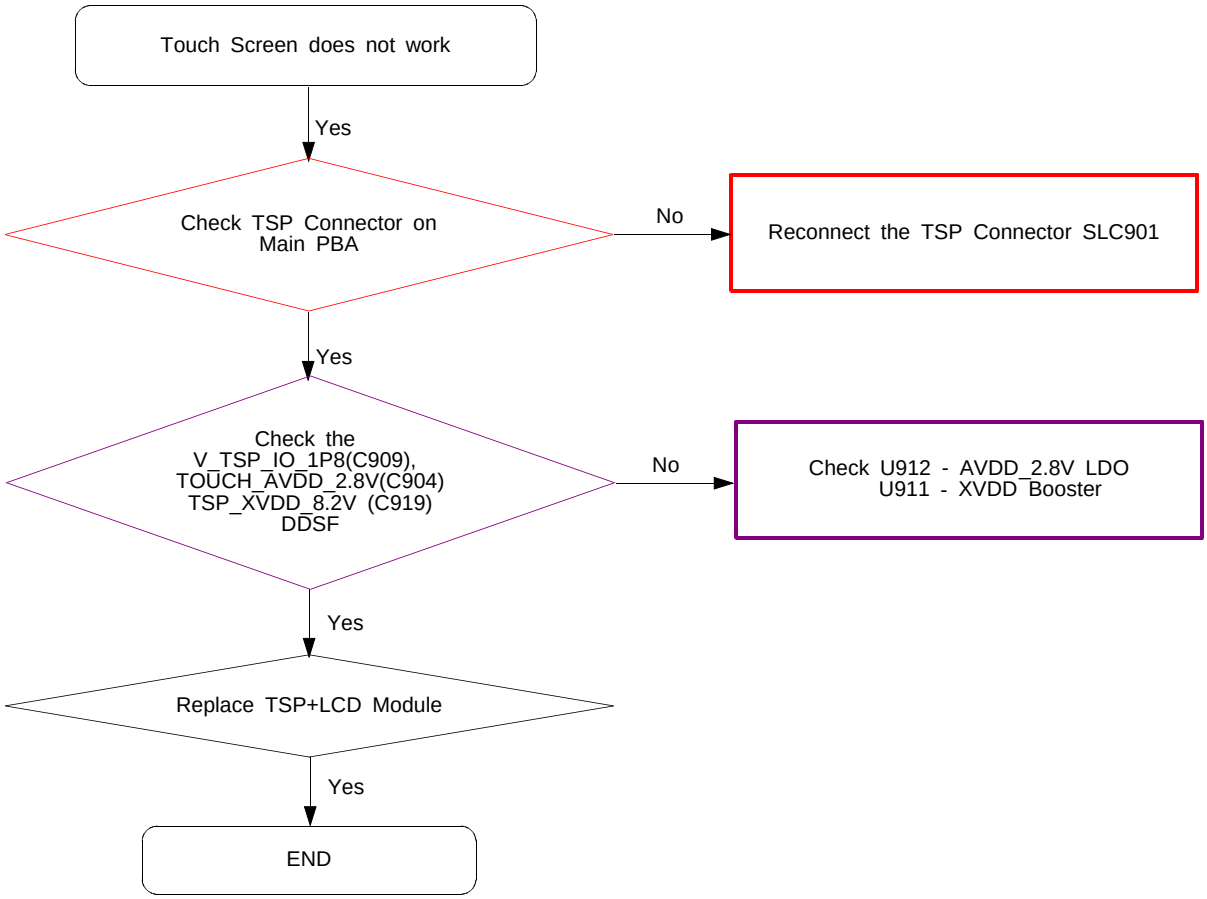

Confidential and proprietary-the contents in this service guide subject to change without prior notice.
Distribution, transmission, or infringement of any content or data from this document without Samsung's written authorization is strictly prohibited.

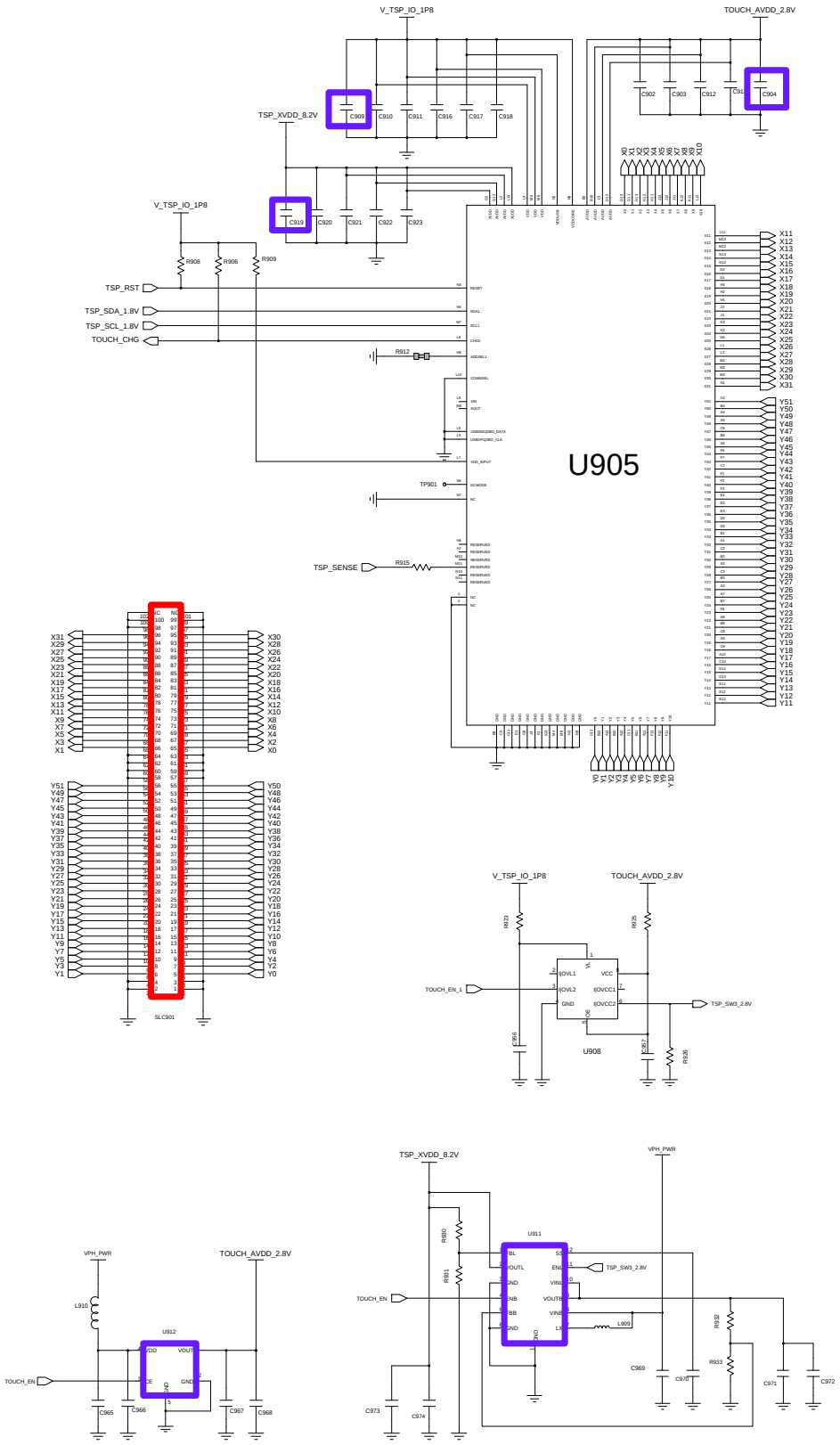

Confidential and proprietary-the contents in this service guide subject to change without prior notice.
Distribution, transmission, or infringement of any content or data from this document without Samsung's written authorization is strictly prohibited.

Confidential and proprietary-the contents in this service guide subject to change without prior notice.
Distribution, transmission, or infringement of any content or data from this document without Samsung's written authorization is strictly prohibited.

8-3-12. VT CAM

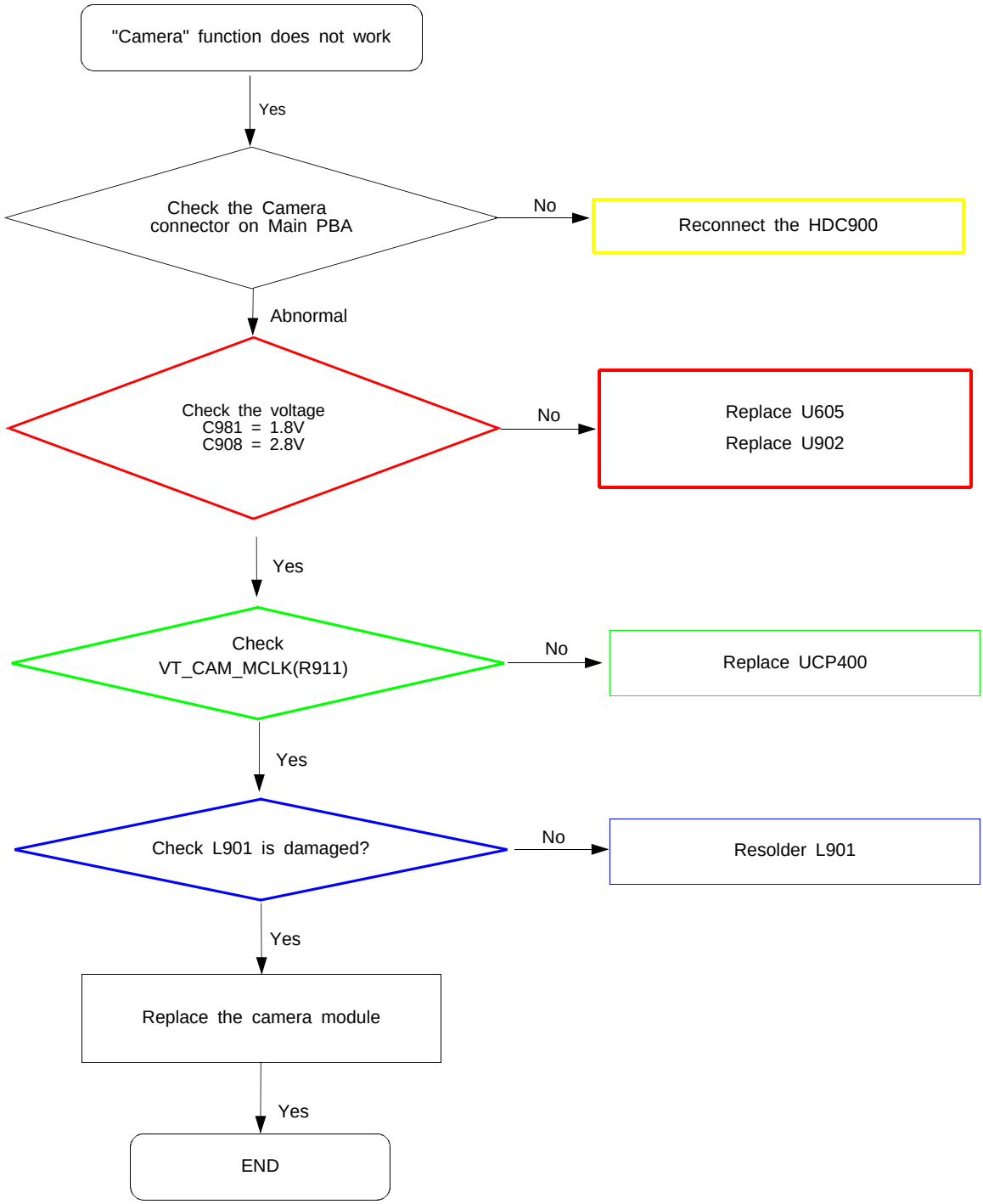

Confidential and proprietary-the contents in this service guide subject to change without prior notice.
Distribution, transmission, or infringement of any content or data from this document without Samsung's written authorization is strictly prohibited.

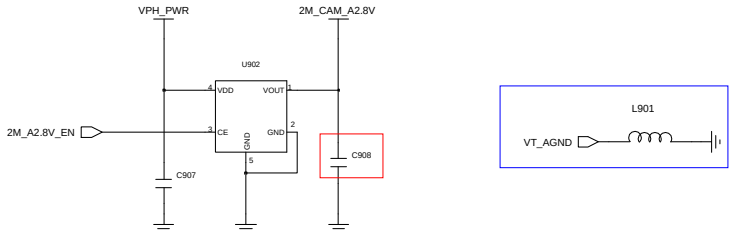

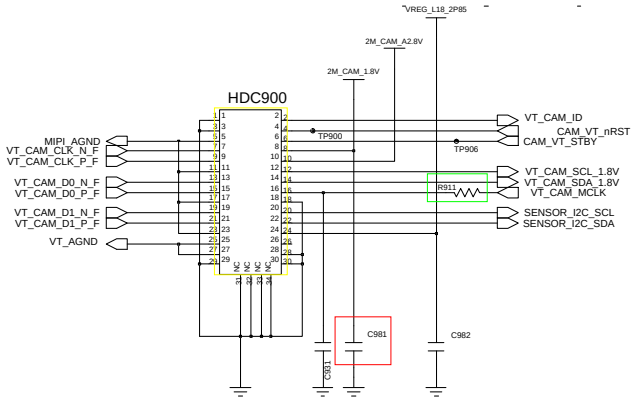

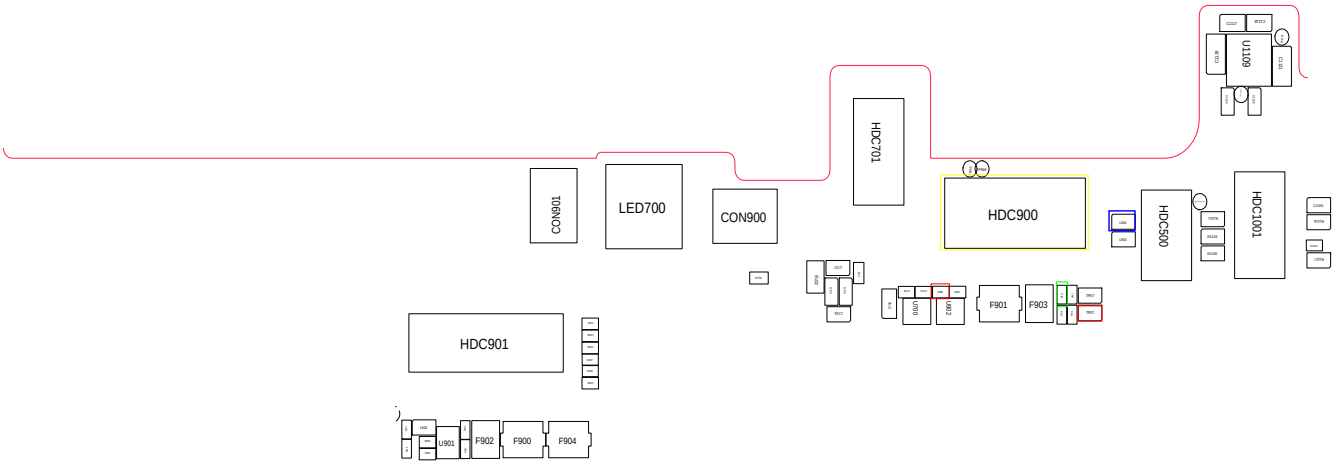

Confidential and proprietary-the contents in this service guide subject to change without prior notice.
Distribution, transmission, or infringement of any content or data from this document without Samsung's written authorization is strictly prohibited.

8-3-13. 8M CAM

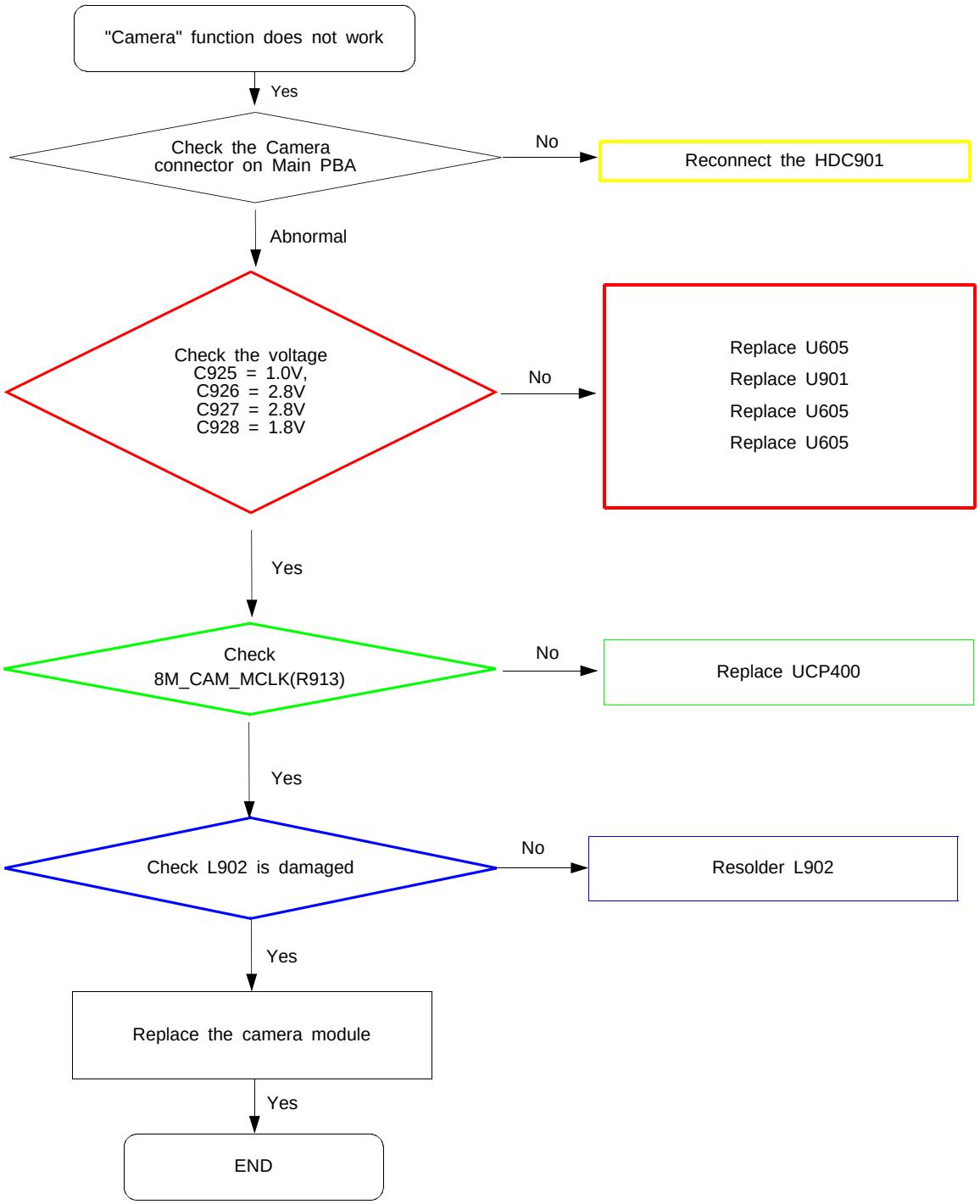

Confidential and proprietary-the contents in this service guide subject to change without prior notice.
Distribution, transmission, or infringement of any content or data from this document without Samsung's written authorization is strictly prohibited.

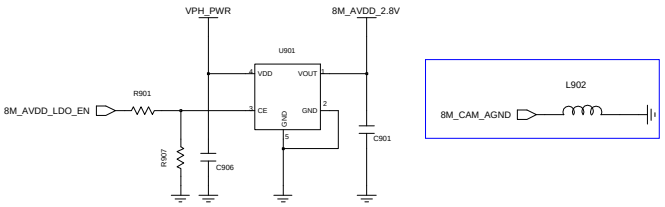

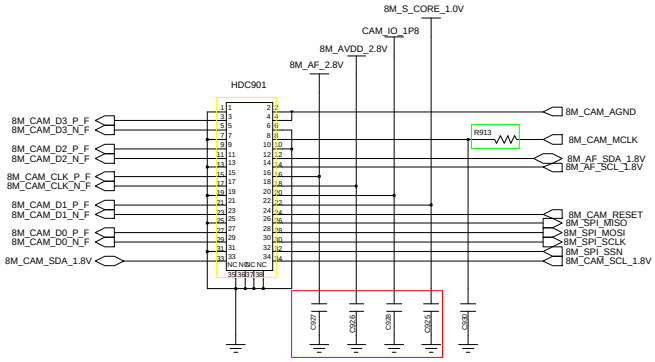

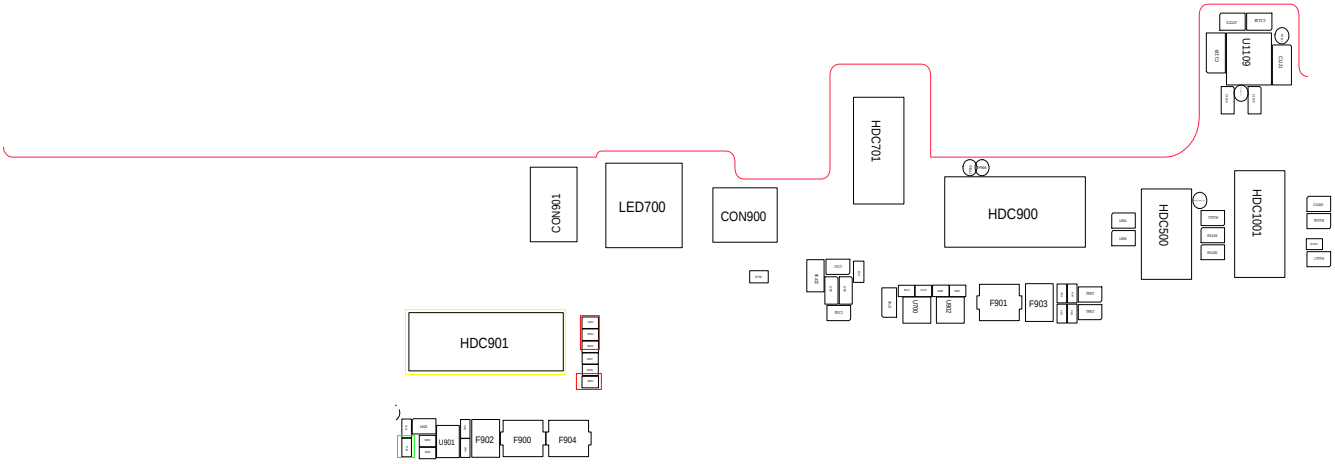

Confidential and proprietary-the contents in this service guide subject to change without prior notice.
Distribution, transmission, or infringement of any content or data from this document without Samsung's written authorization is strictly prohibited.

8-3-14. OTG

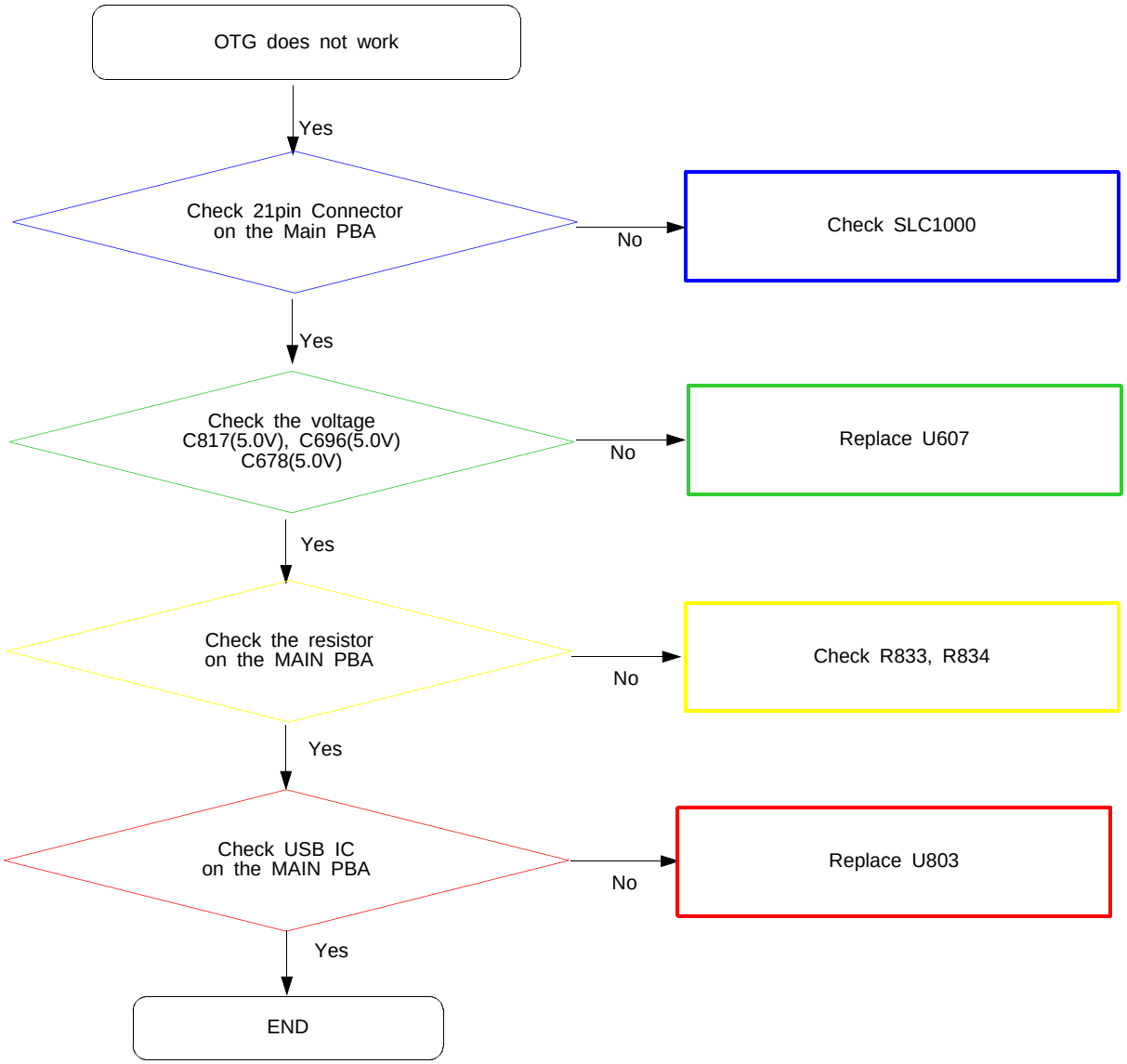

Confidential and proprietary-the contents in this service guide subject to change without prior notice.
Distribution, transmission, or infringement of any content or data from this document without Samsung's written authorization is strictly prohibited.

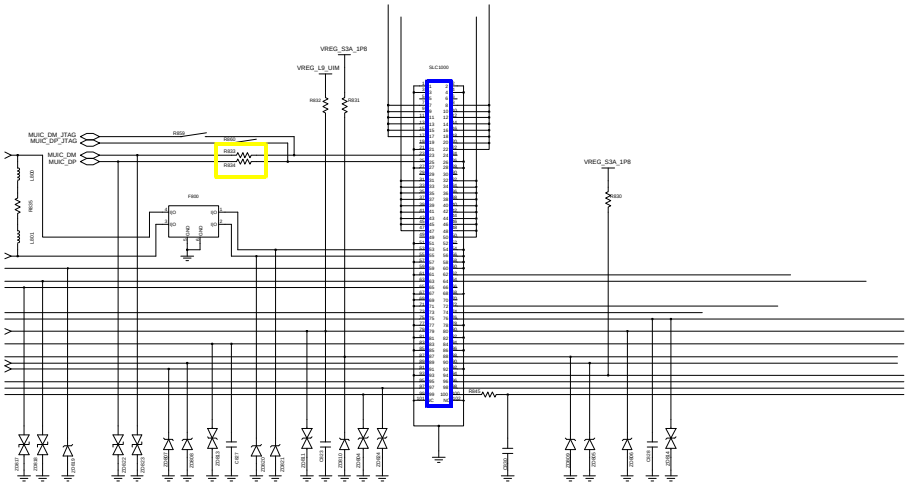

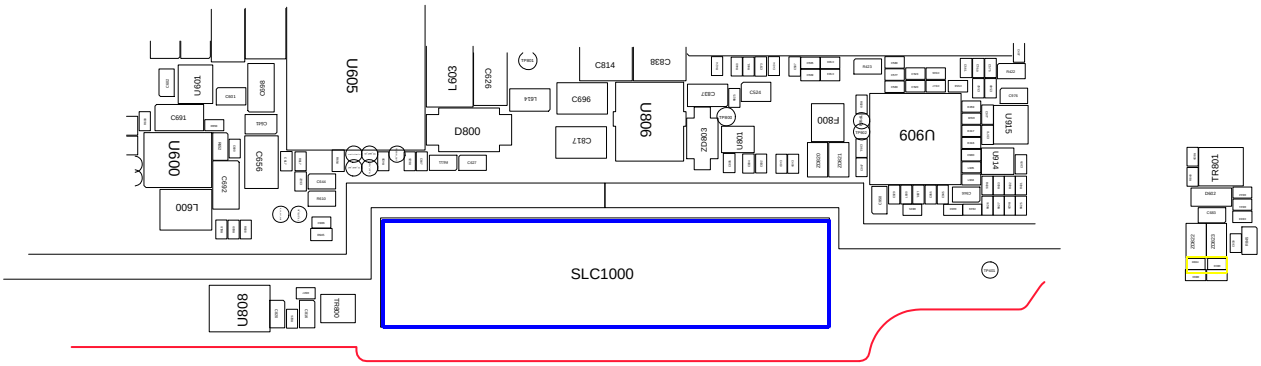

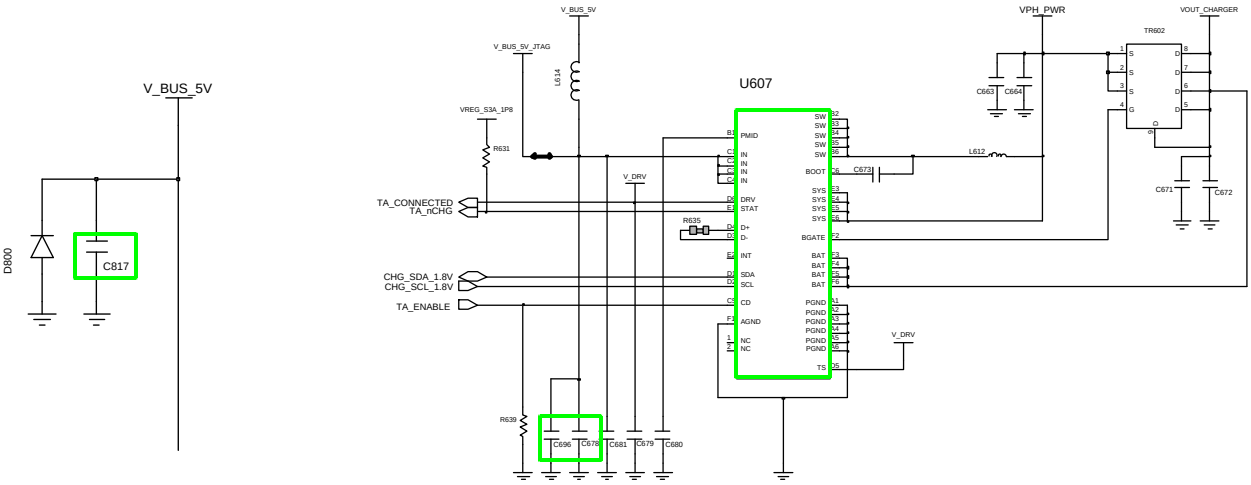

Confidential and proprietary-the contents in this service guide subject to change without prior notice.
Distribution, transmission, or infringement of any content or data from this document without Samsung's written authorization is strictly prohibited.

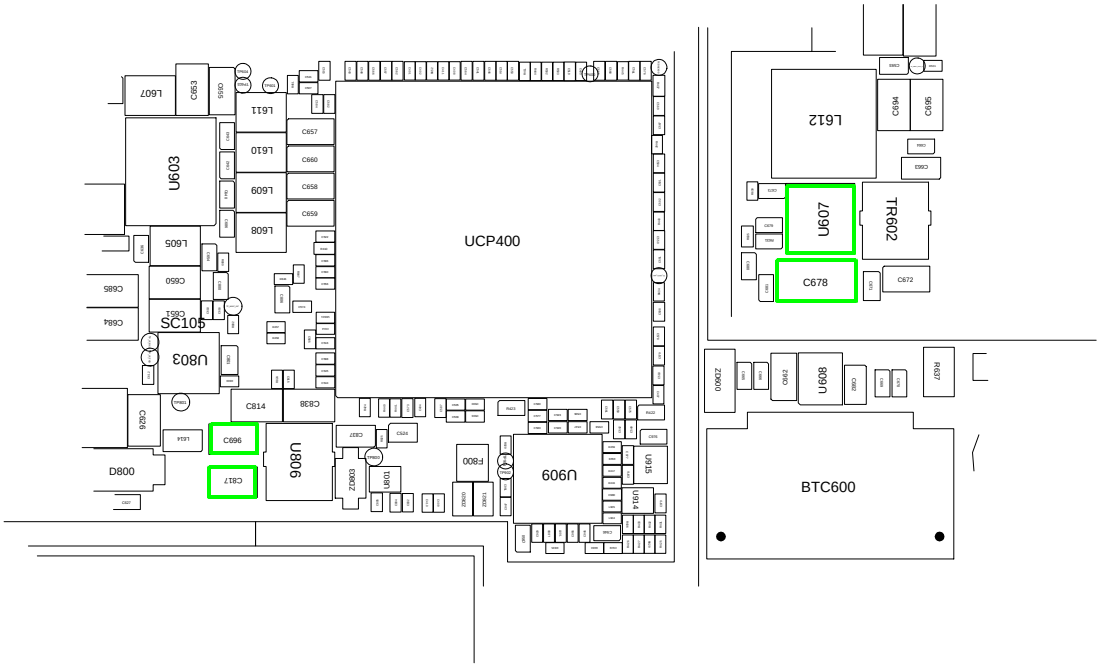

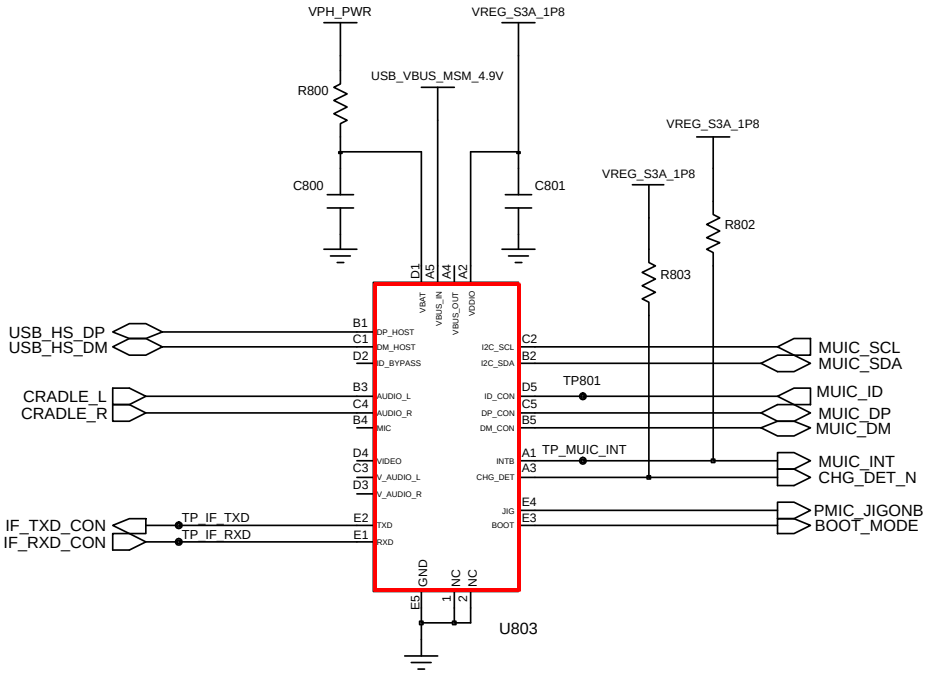

Confidential and proprietary-the contents in this service guide subject to change without prior notice.
Distribution, transmission, or infringement of any content or data from this document without Samsung's written authorization is strictly prohibited.

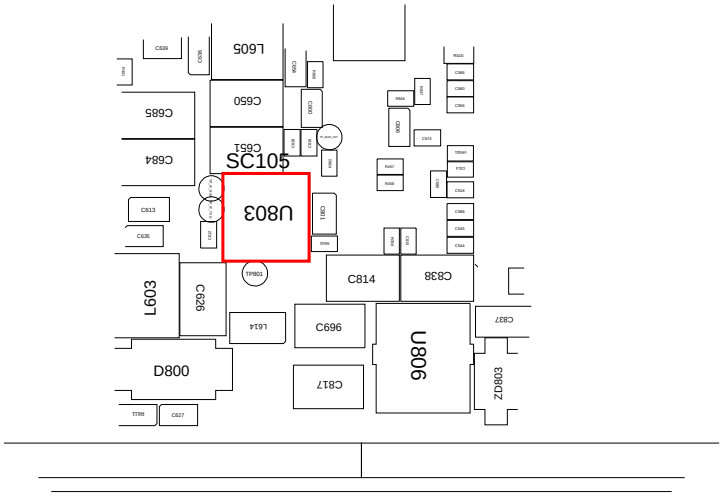
ZD803
U806
C837
C838
C814
C817
C696
L614
C626
L609
D800
C627
R611
L603
C613
R613
C684
C685
C651
C650
L605
C629
C630
C639
SC105
U803
C801
C802
C803
C804
C805
C806
C807
C808
C809
C810
C811
C812
C813
C814
C815
C816
C817
C818
C819
C820
C821
C822
C823
C824
C825
C826
C827
C828
C829
C830
C831
C832
C833
C834
C835
C836
C837
C838
C839
C840

8-3-15. MHL

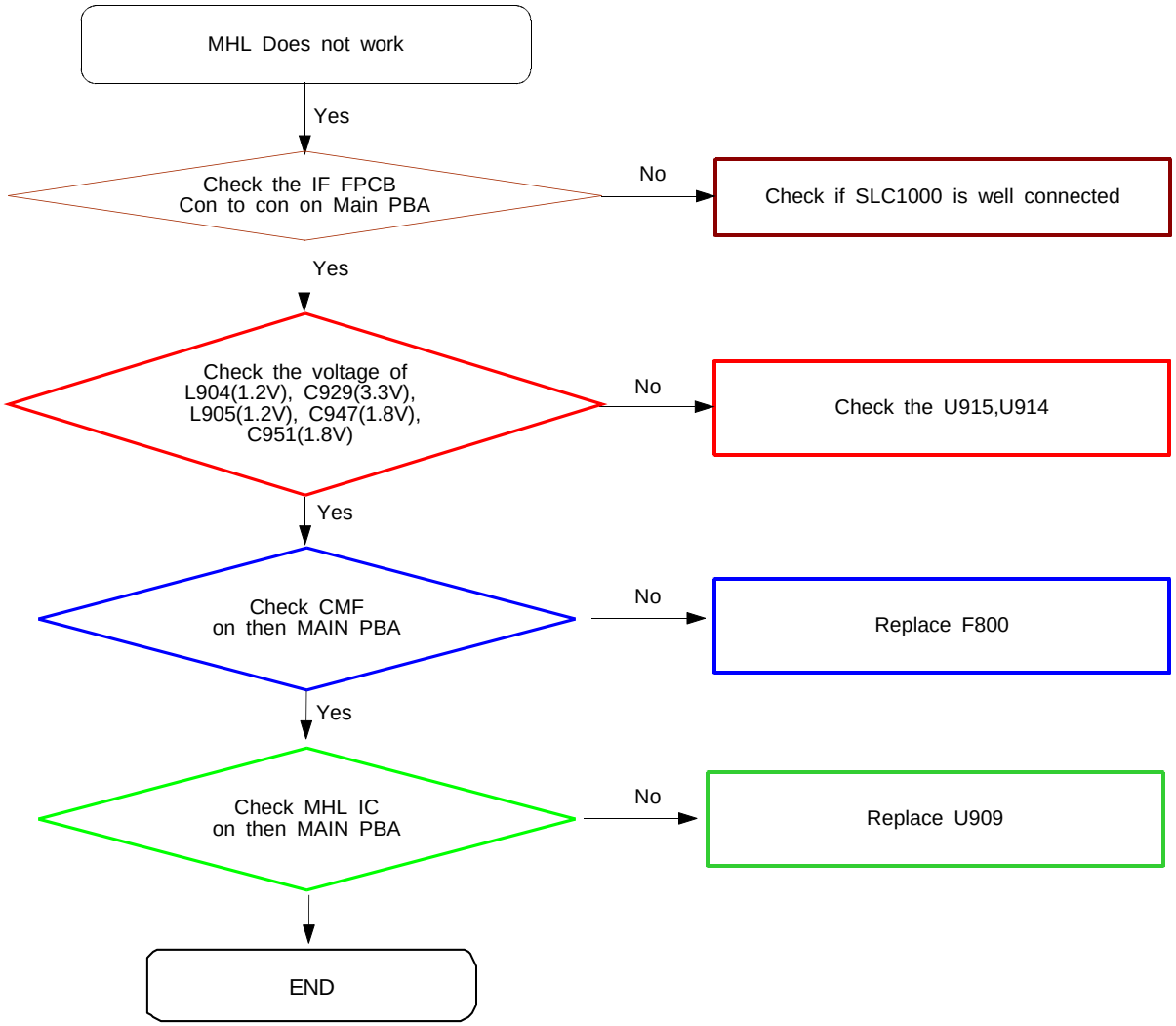

Confidential and proprietary-the contents in this service guide subject to change without prior notice.
Distribution, transmission, or infringement of any content or data from this document without Samsung's written authorization is strictly prohibited.

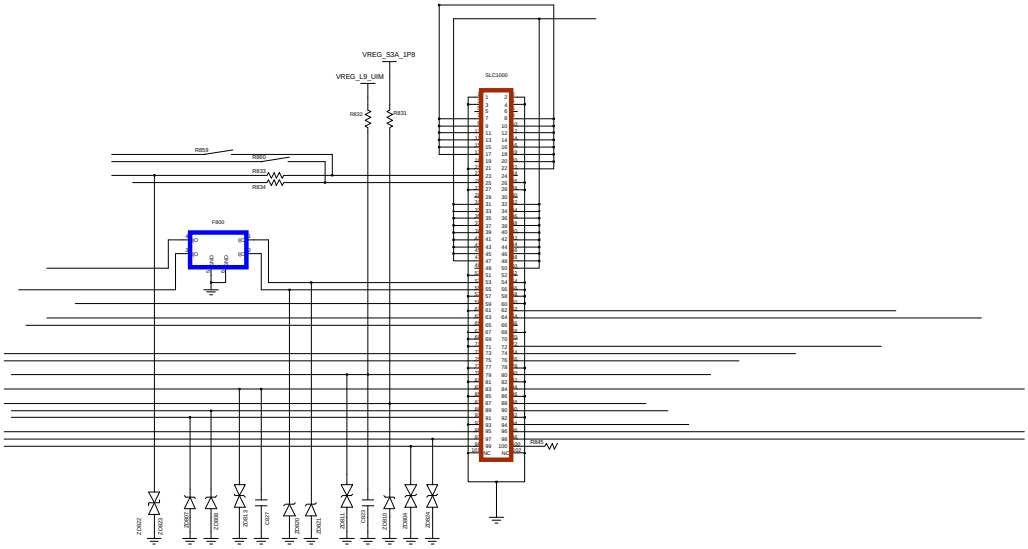

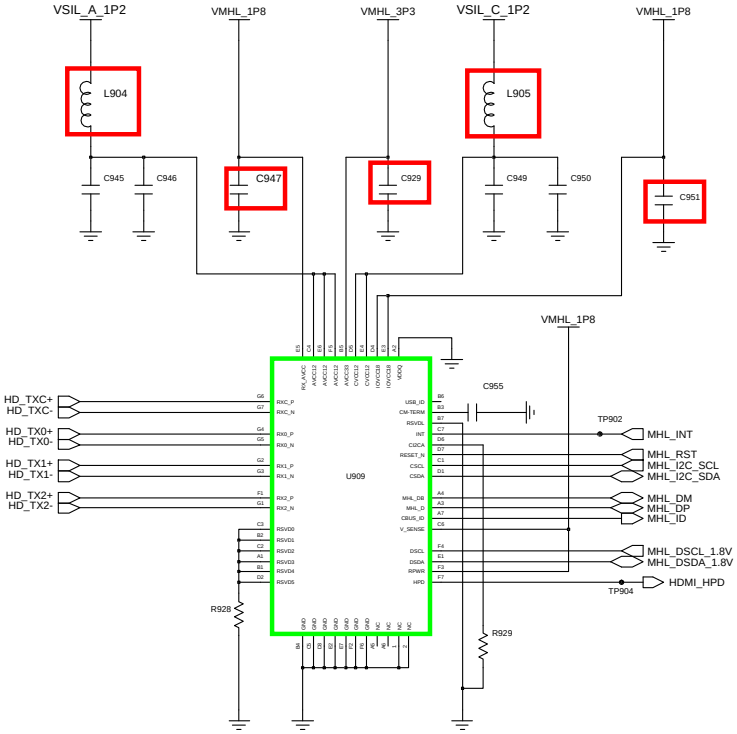

Confidential and proprietary-the contents in this service guide subject to change without prior notice.
Distribution, transmission, or infringement of any content or data from this document without Samsung's written authorization is strictly prohibited.

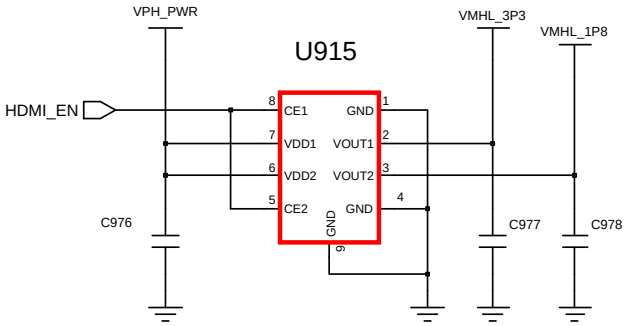

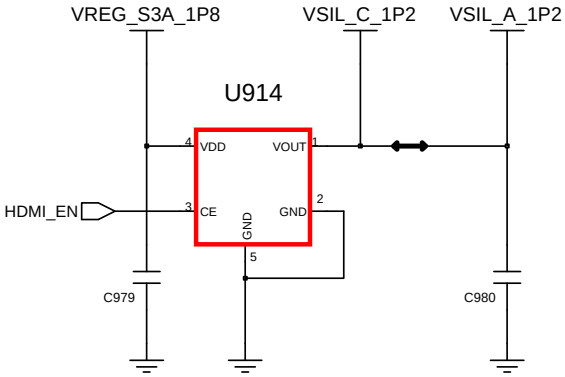

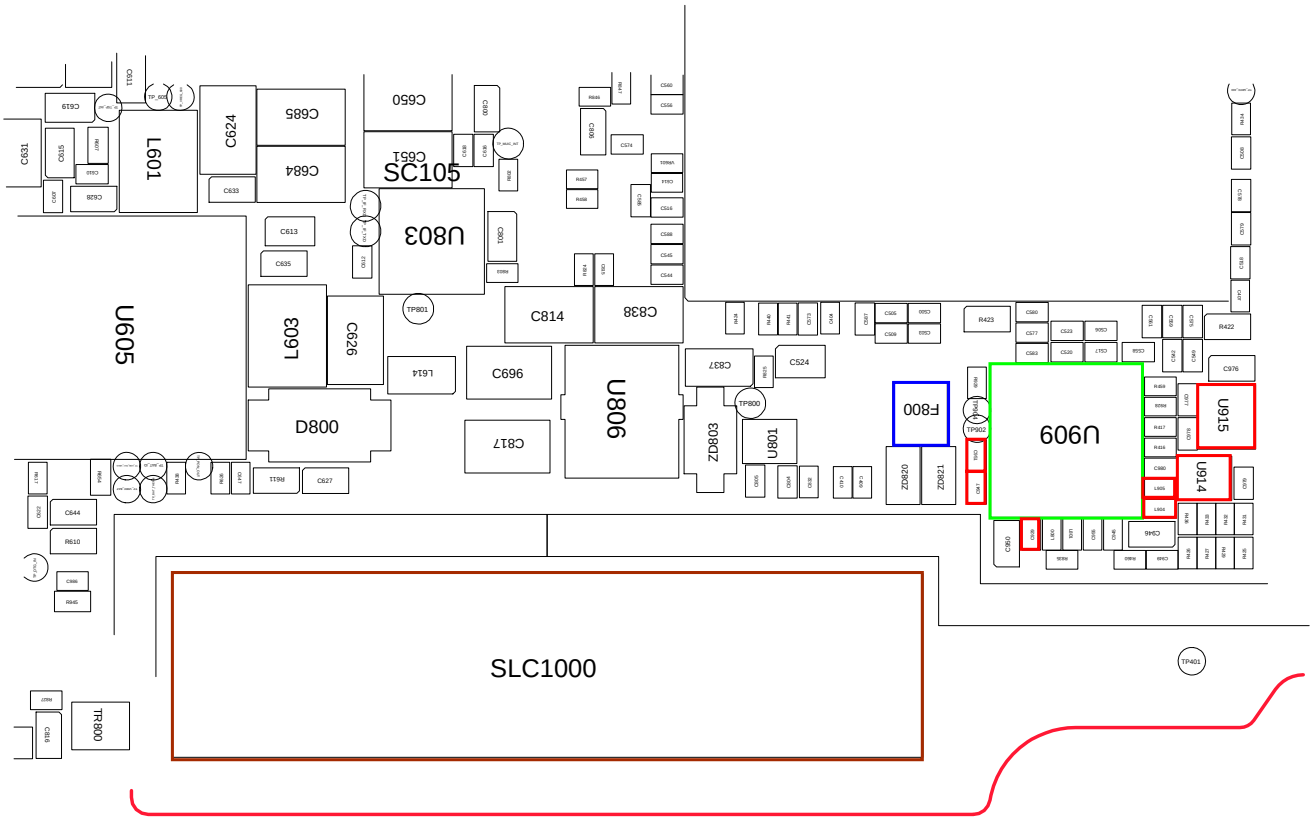

Confidential and proprietary-the contents in this service guide subject to change without prior notice.
Distribution, transmission, or infringement of any content or data from this document without Samsung's written authorization is strictly prohibited.

8-3-16. S-pen

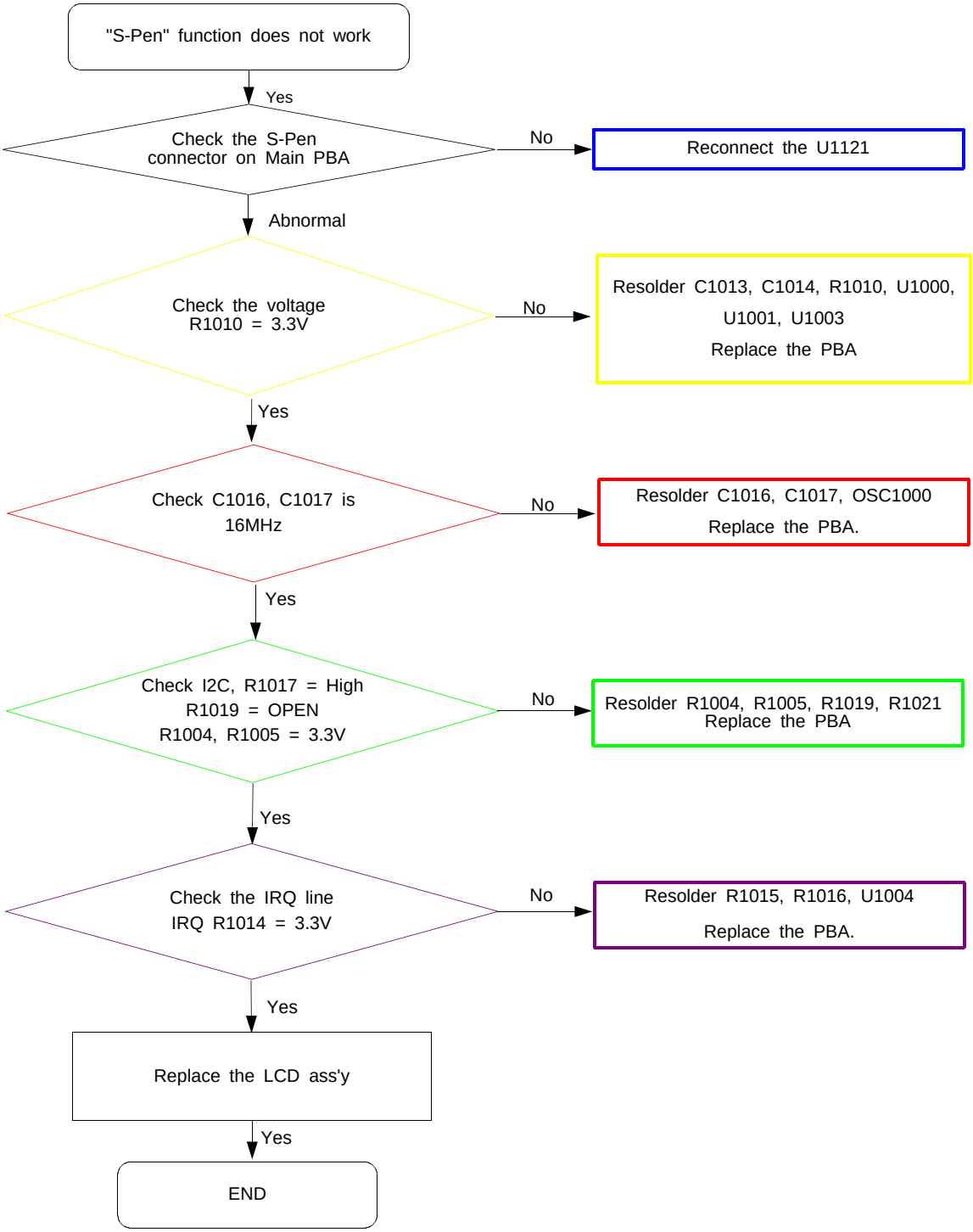

Confidential and proprietary-the contents in this service guide subject to change without prior notice.
Distribution, transmission, or infringement of any content or data from this document without Samsung's written authorization is strictly prohibited.

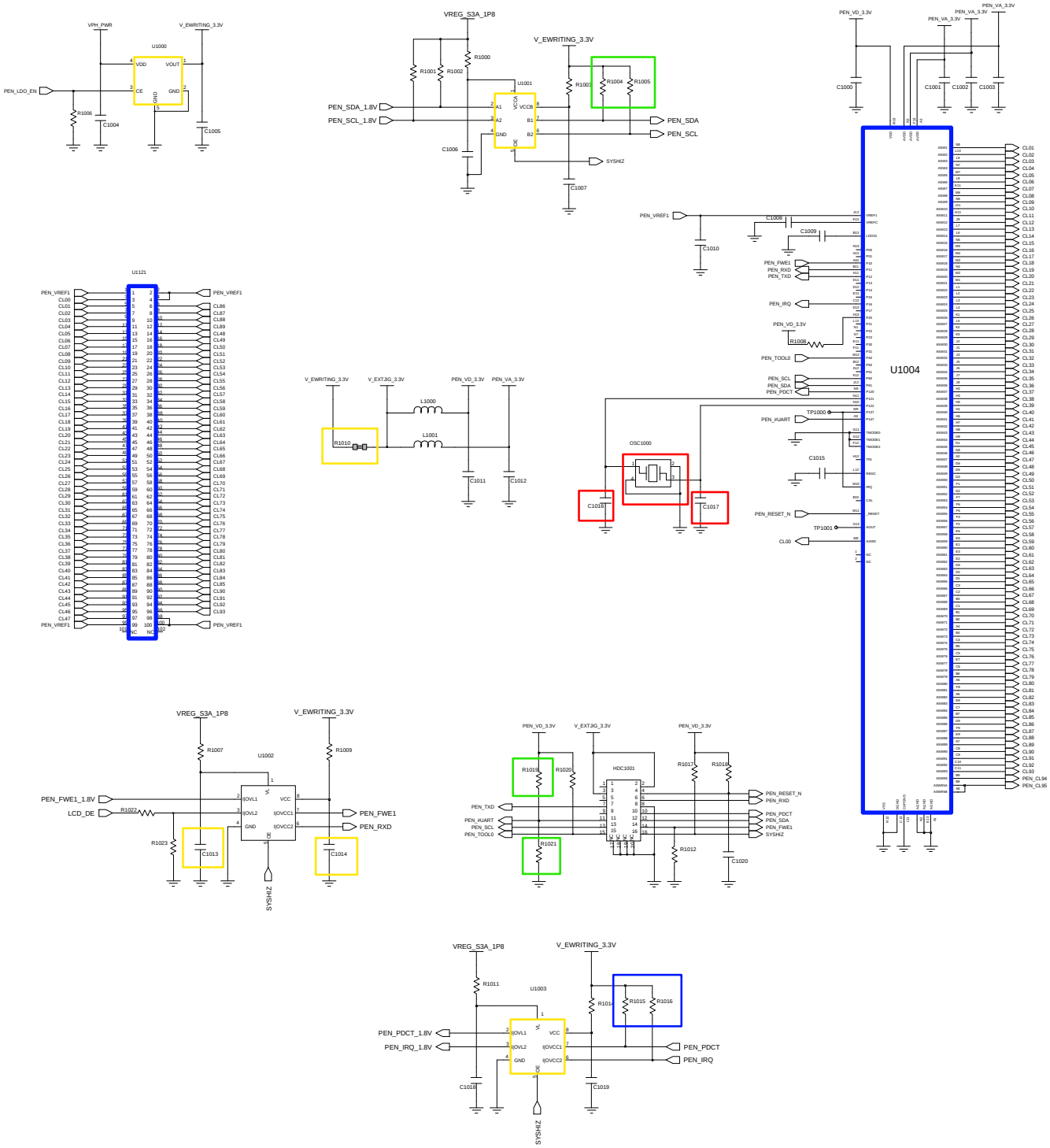

Confidential and proprietary-the contents in this service guide subject to change without prior notice.
Distribution, transmission, or infringement of any content or data from this document without Samsung's written authorization is strictly prohibited.

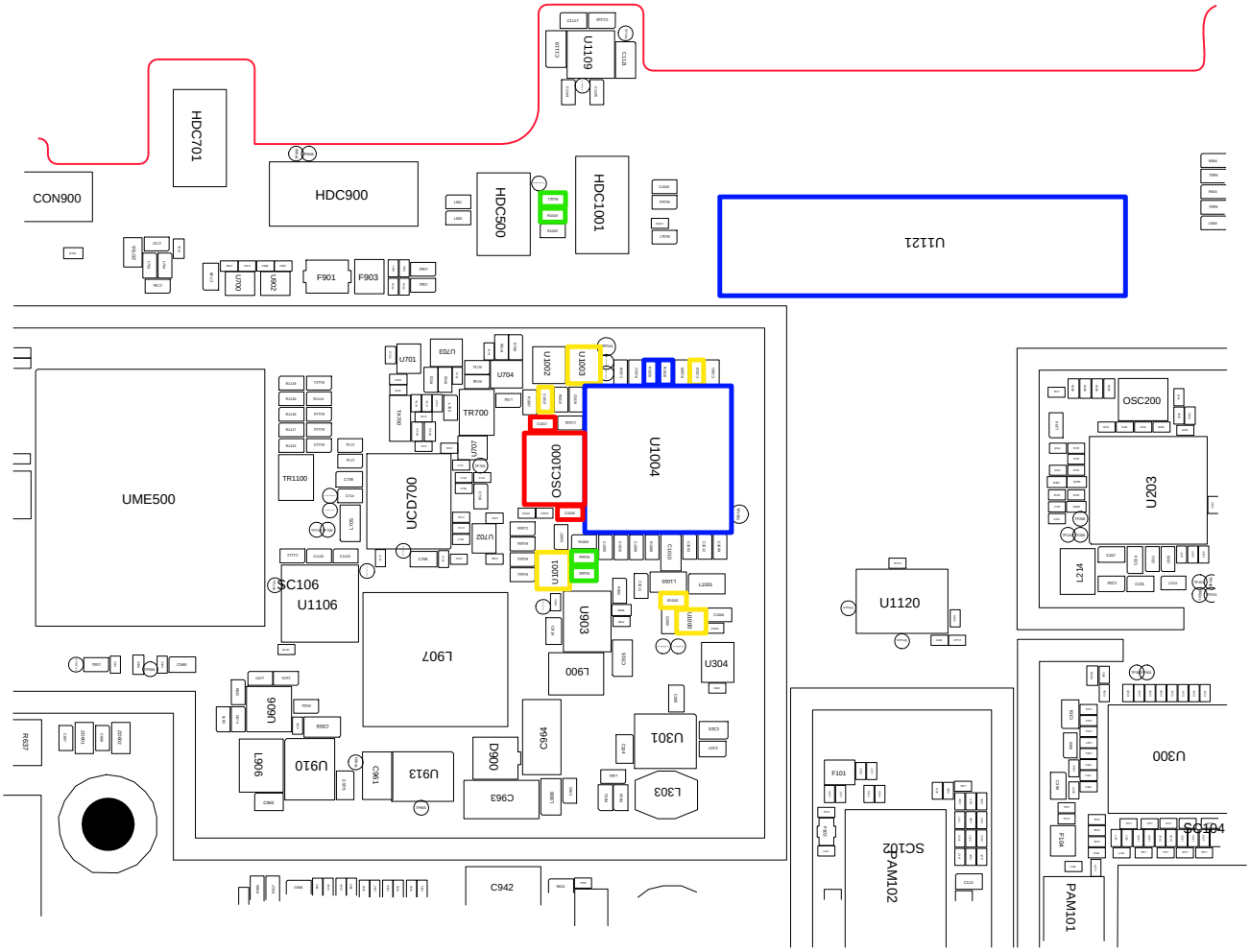

Confidential and proprietary-the contents in this service guide subject to change without prior notice.
Distribution, transmission, or infringement of any content or data from this document without Samsung's written authorization is strictly prohibited.

8-3-17. Sim Part

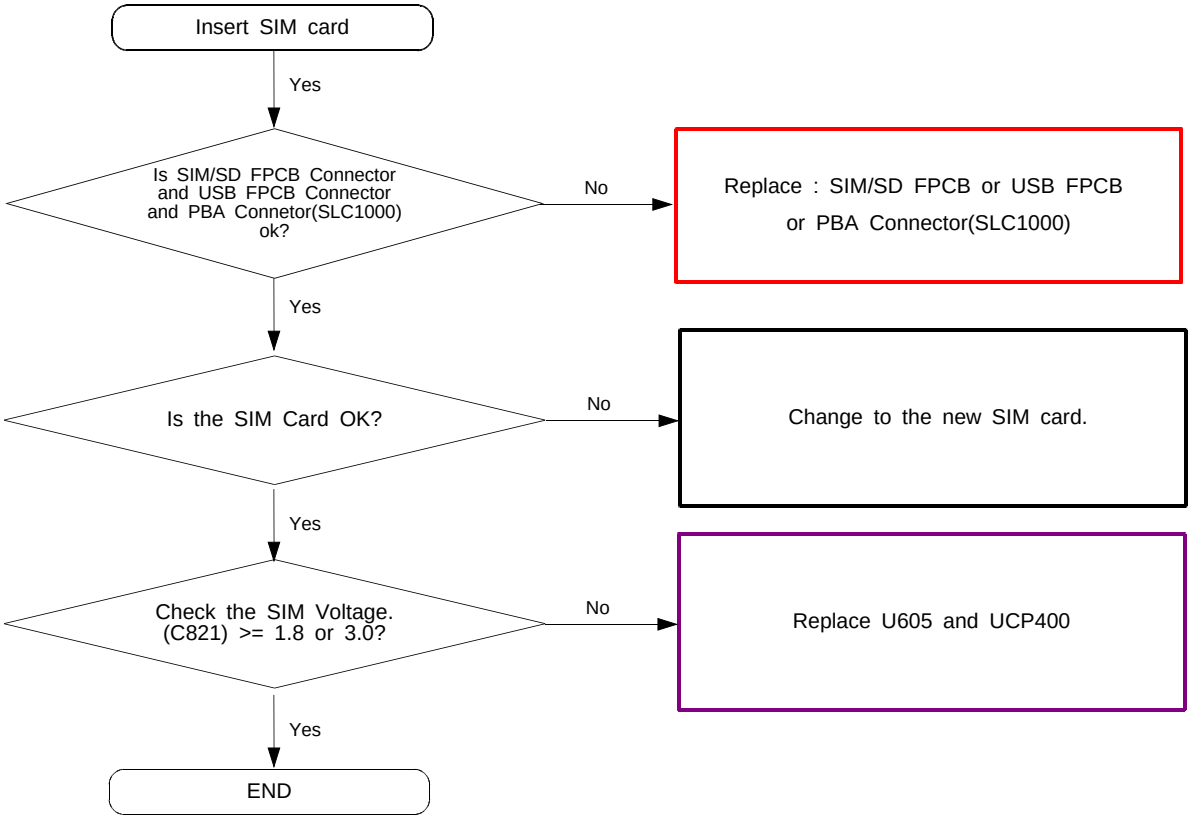

Confidential and proprietary-the contents in this service guide subject to change without prior notice.
Distribution, transmission, or infringement of any content or data from this document without Samsung's written authorization is strictly prohibited.

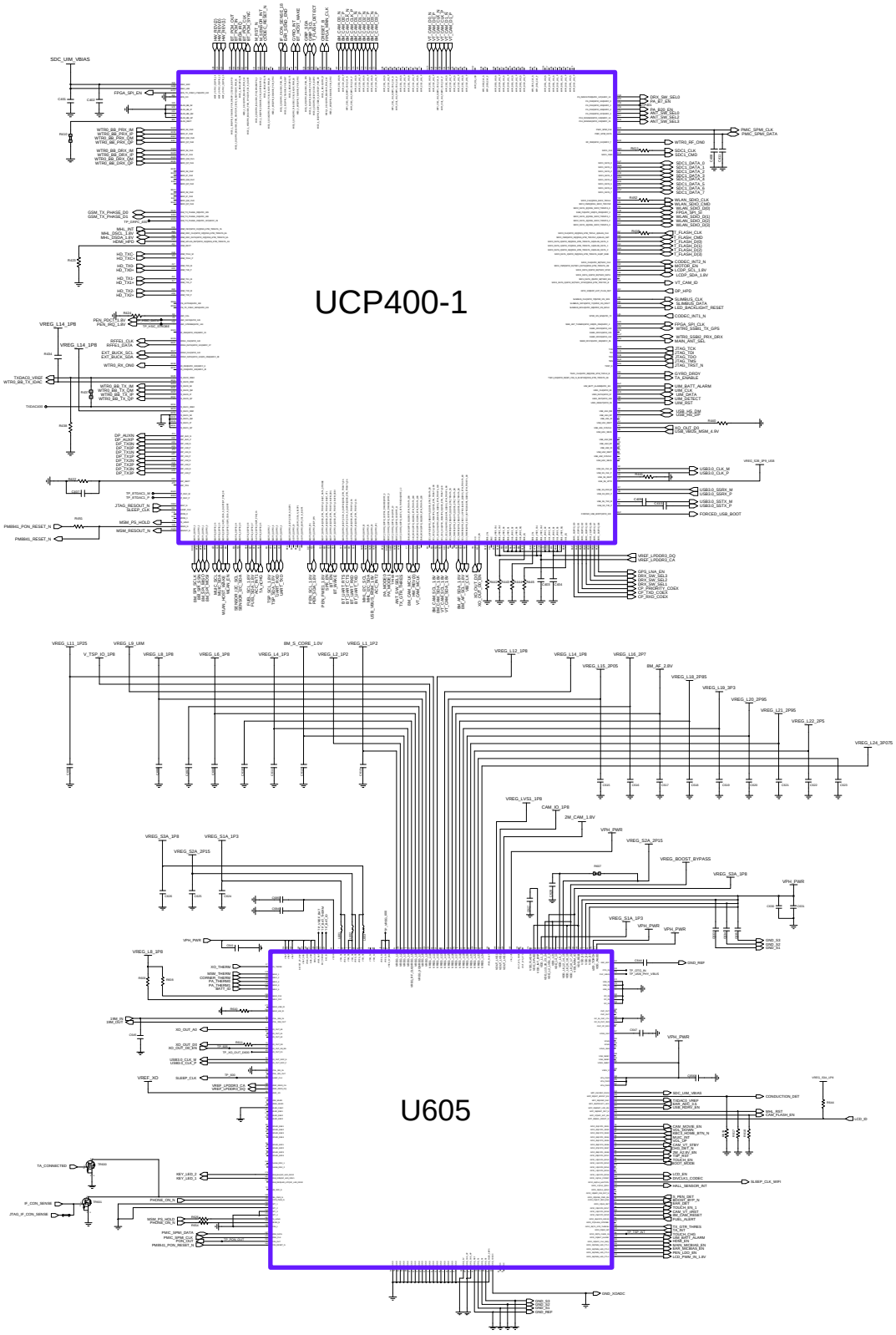

Confidential and proprietary-the contents in this service guide subject to change without prior notice.
Distribution, transmission, or infringement of any content or data from this document without Samsung's written authorization is strictly prohibited.

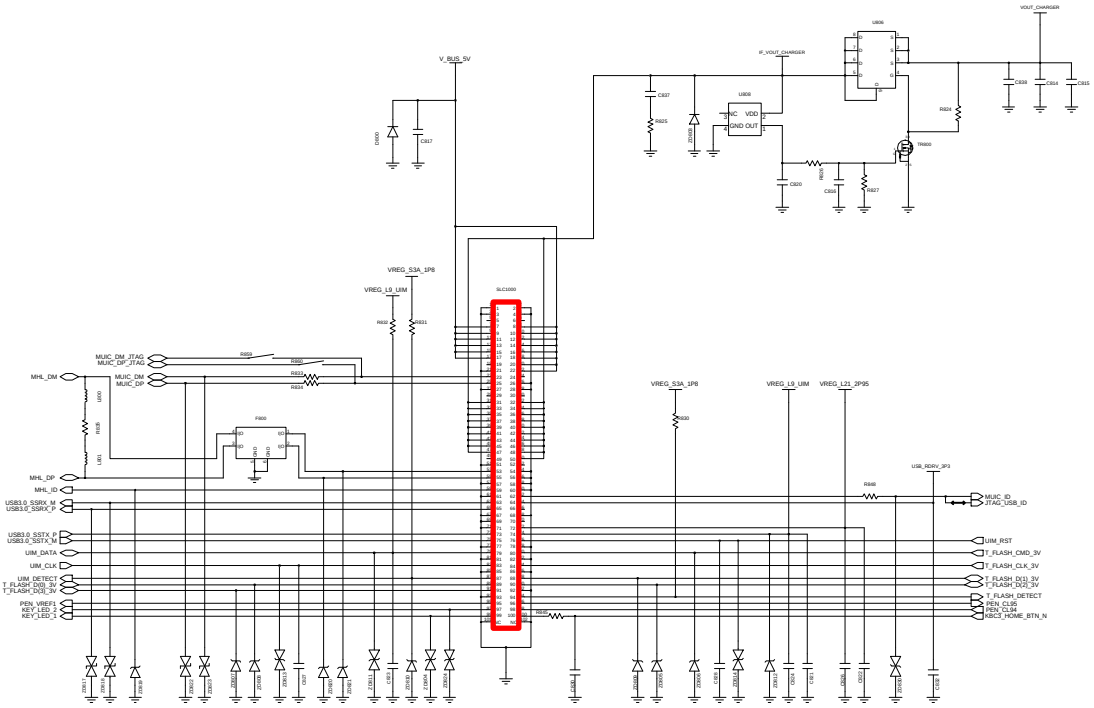

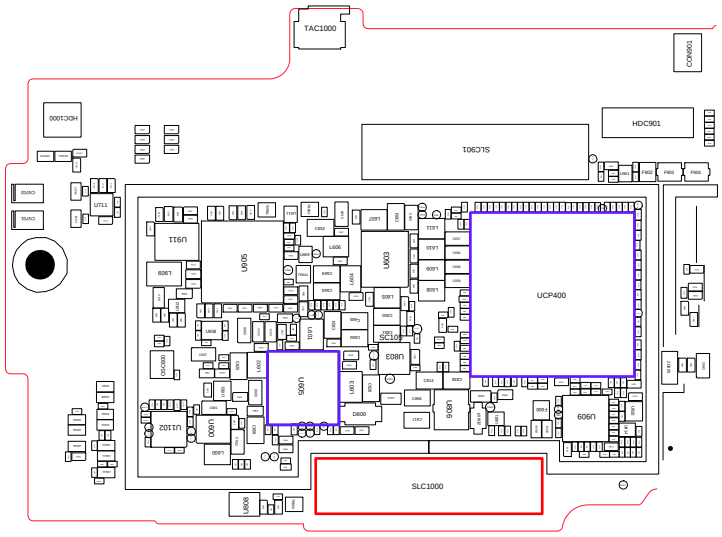

Confidential and proprietary-the contents in this service guide subject to change without prior notice.
Distribution, transmission, or infringement of any content or data from this document without Samsung's written authorization is strictly prohibited.

8-3-18. Motor

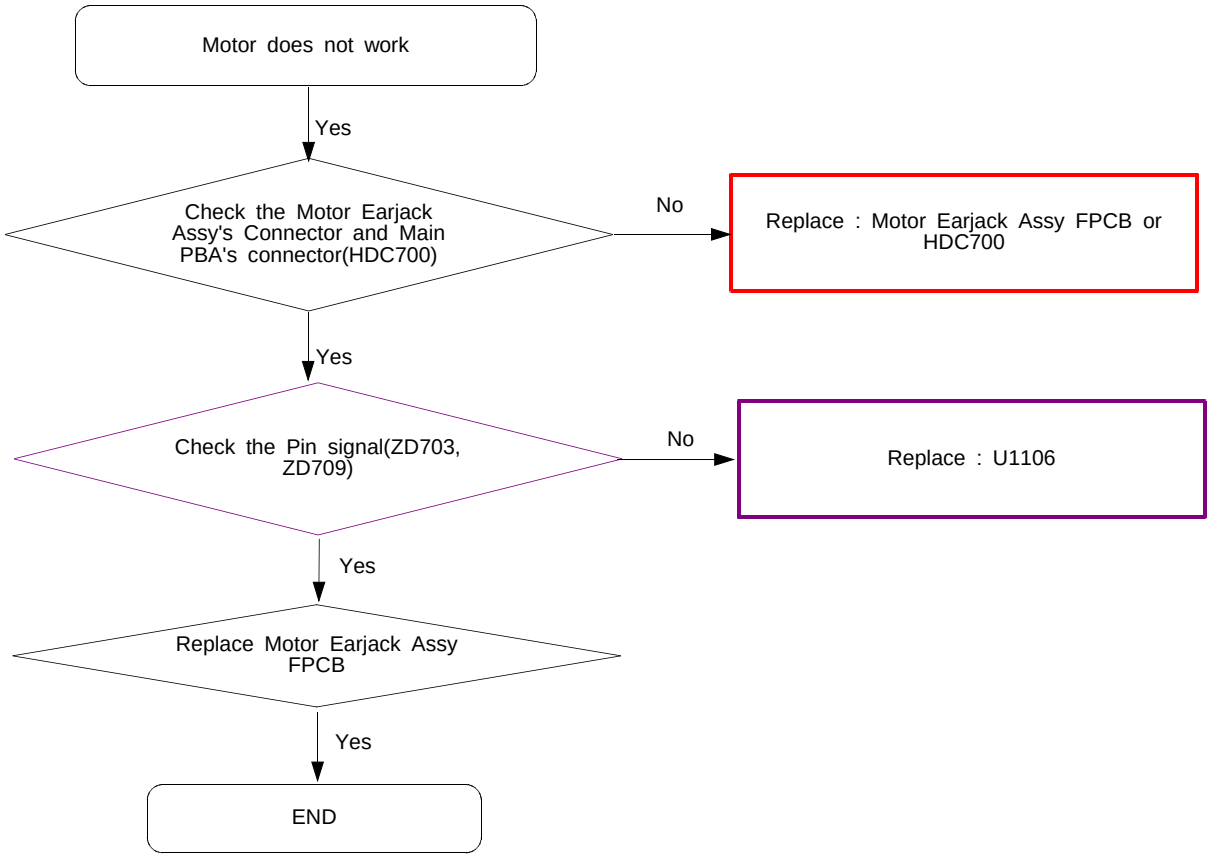

Confidential and proprietary-the contents in this service guide subject to change without prior notice.
Distribution, transmission, or infringement of any content or data from this document without Samsung's written authorization is strictly prohibited.

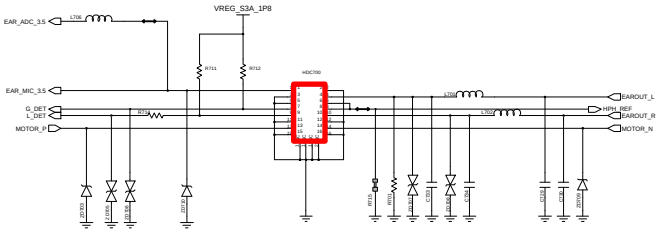

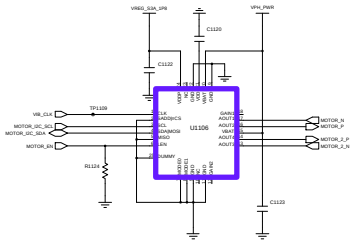

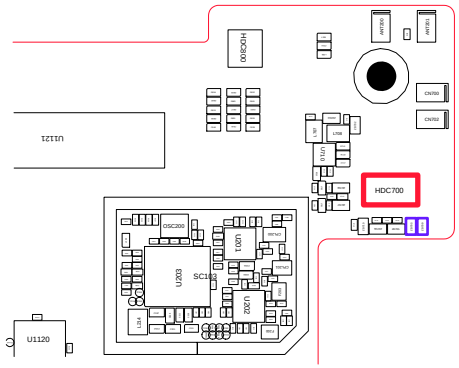

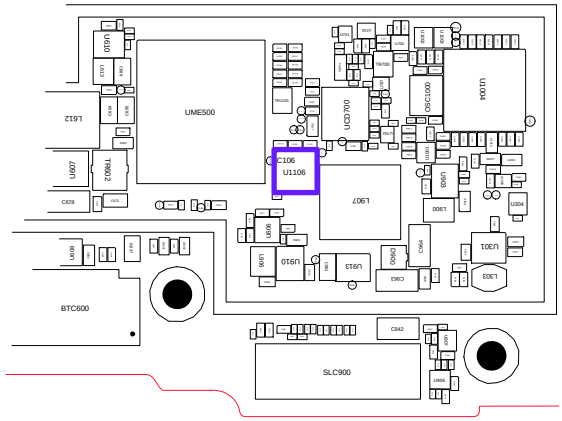

Confidential and proprietary-the contents in this service guide subject to change without prior notice.
Distribution, transmission, or infringement of any content or data from this document without Samsung's written authorization is strictly prohibited.

8-3-19. LTE Band1/ WCDMA Band1 RX

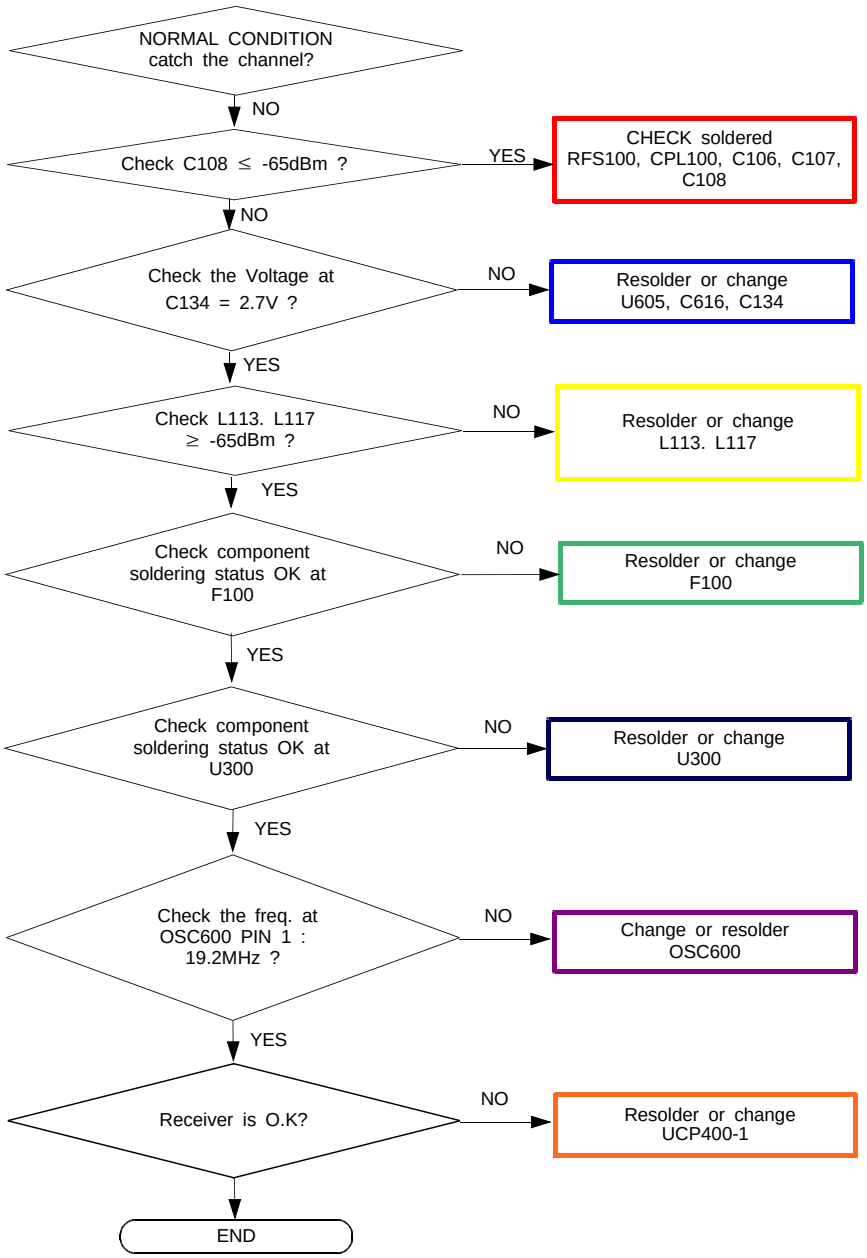

Confidential and proprietary-the contents in this service guide subject to change without prior notice.
Distribution, transmission, or infringement of any content or data from this document without Samsung's written authorization is strictly prohibited.

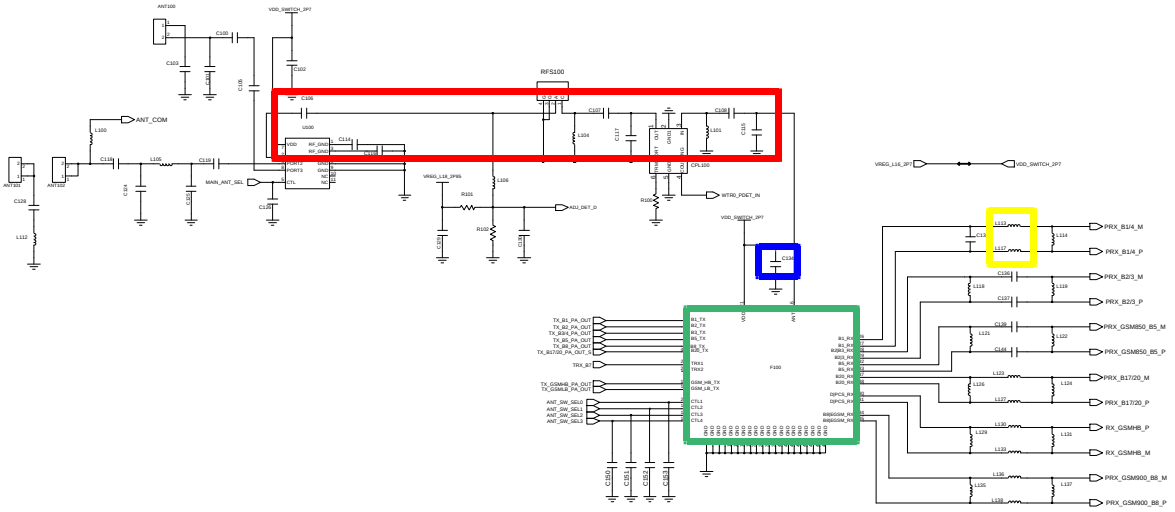

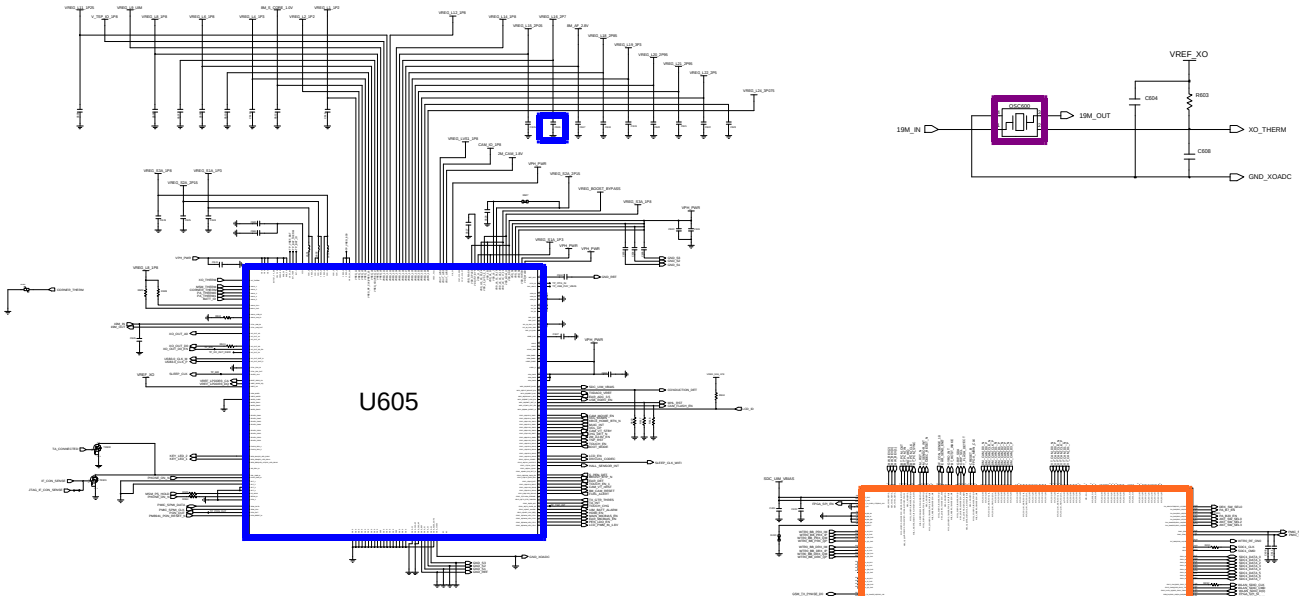

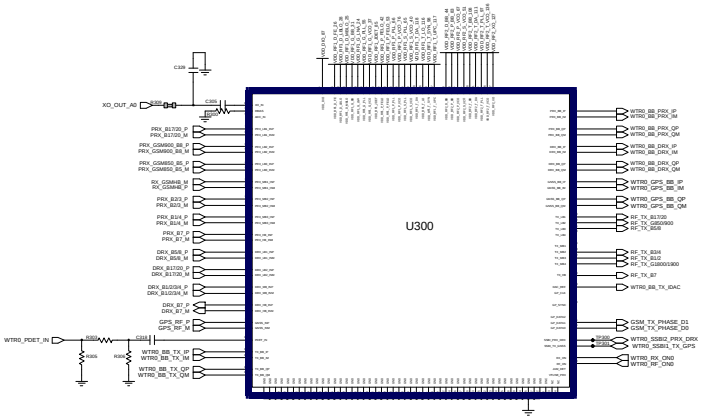

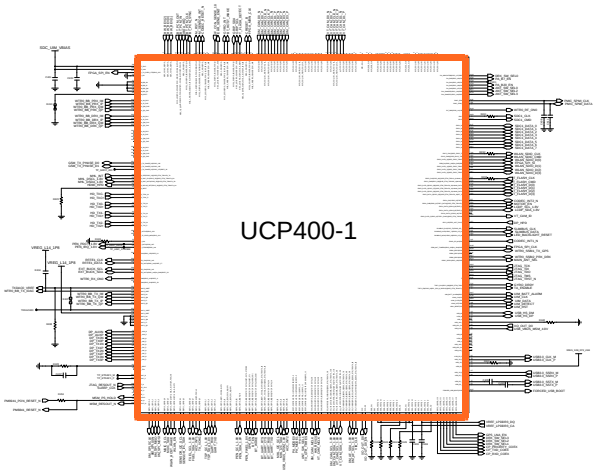

Confidential and proprietary-the contents in this service guide subject to change without prior notice.
Distribution, transmission, or infringement of any content or data from this document without Samsung's written authorization is strictly prohibited.

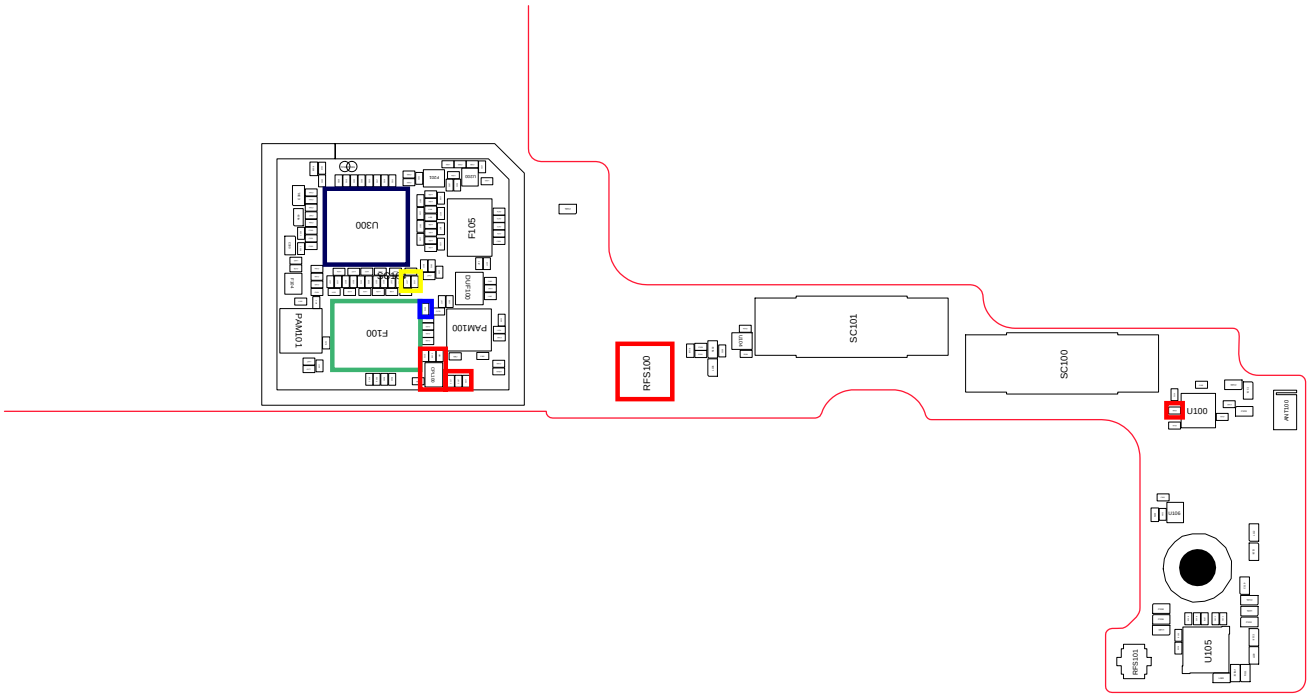

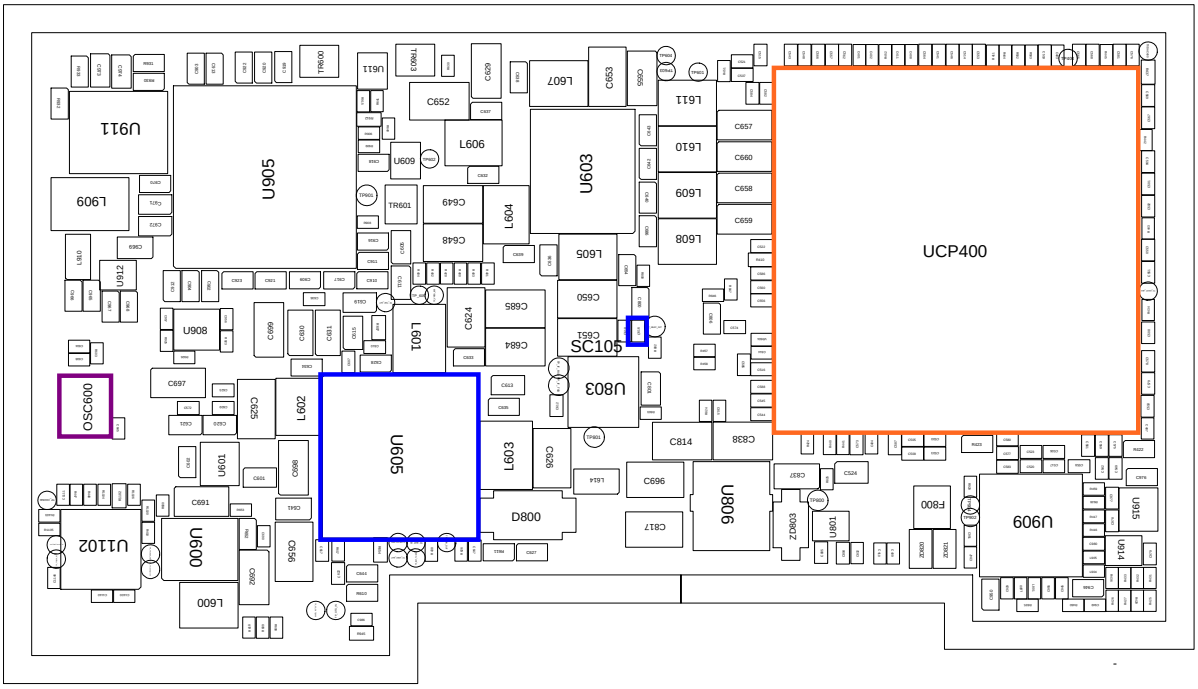

Confidential and proprietary-the contents in this service guide subject to change without prior notice.
Distribution, transmission, or infringement of any content or data from this document without Samsung's written authorization is strictly prohibited.

8-3-20. LTE Band3/ WCDMA Band2 RX

CONTINUOUS RX ON
RF INPUT : LTE B3: 1575CH
WCDMA B2: 4407CH
AMP : -50dBm

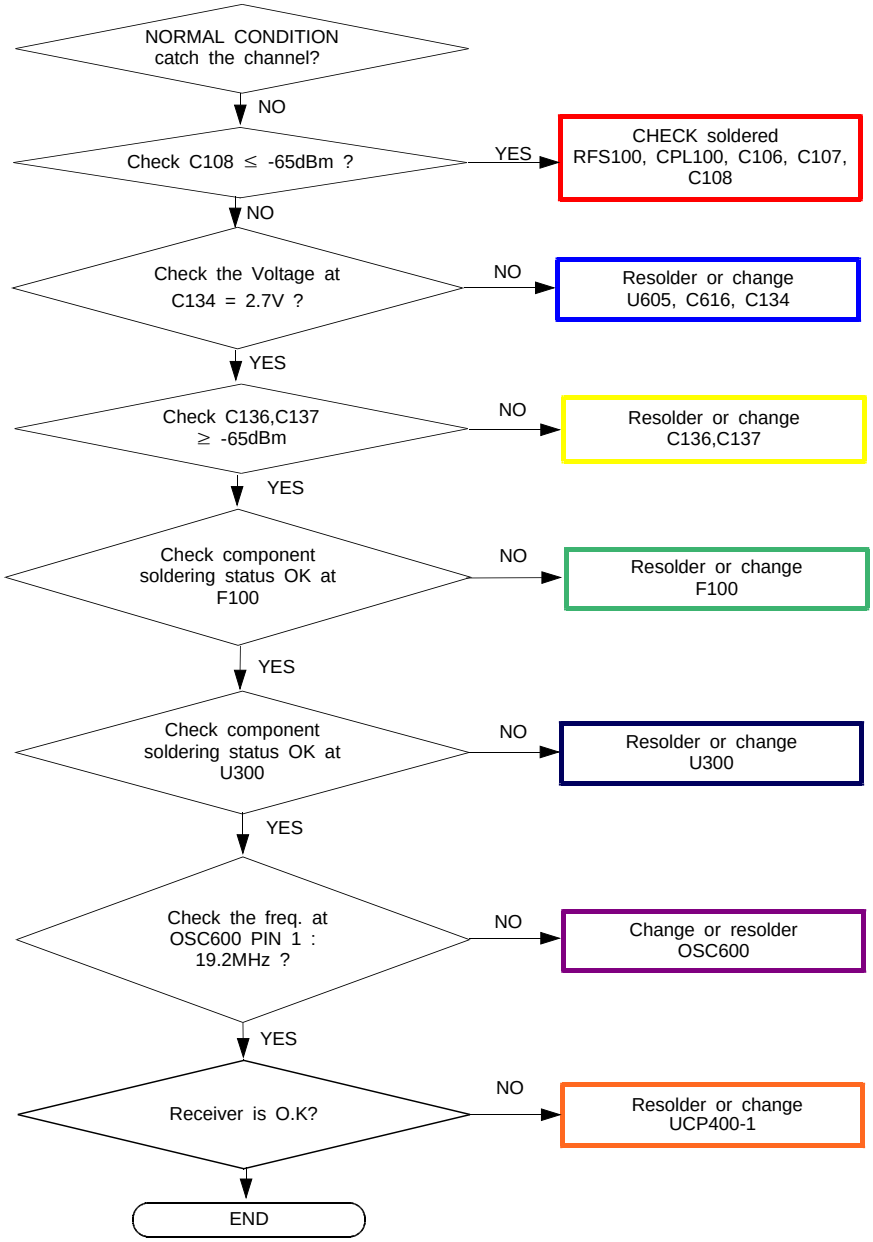

Confidential and proprietary-the contents in this service guide subject to change without prior notice.
Distribution, transmission, or infringement of any content or data from this document without Samsung's written authorization is strictly prohibited.

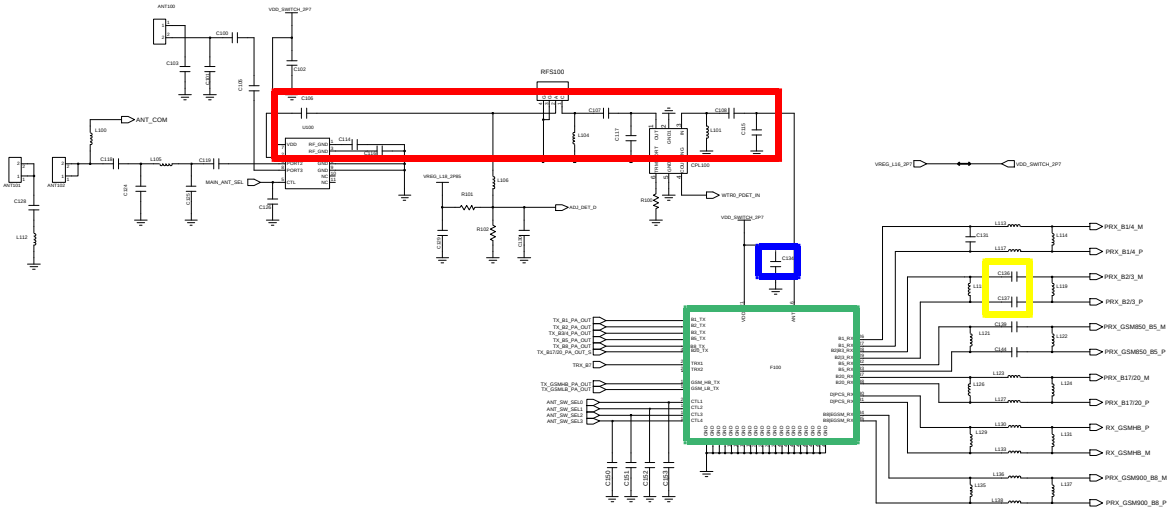

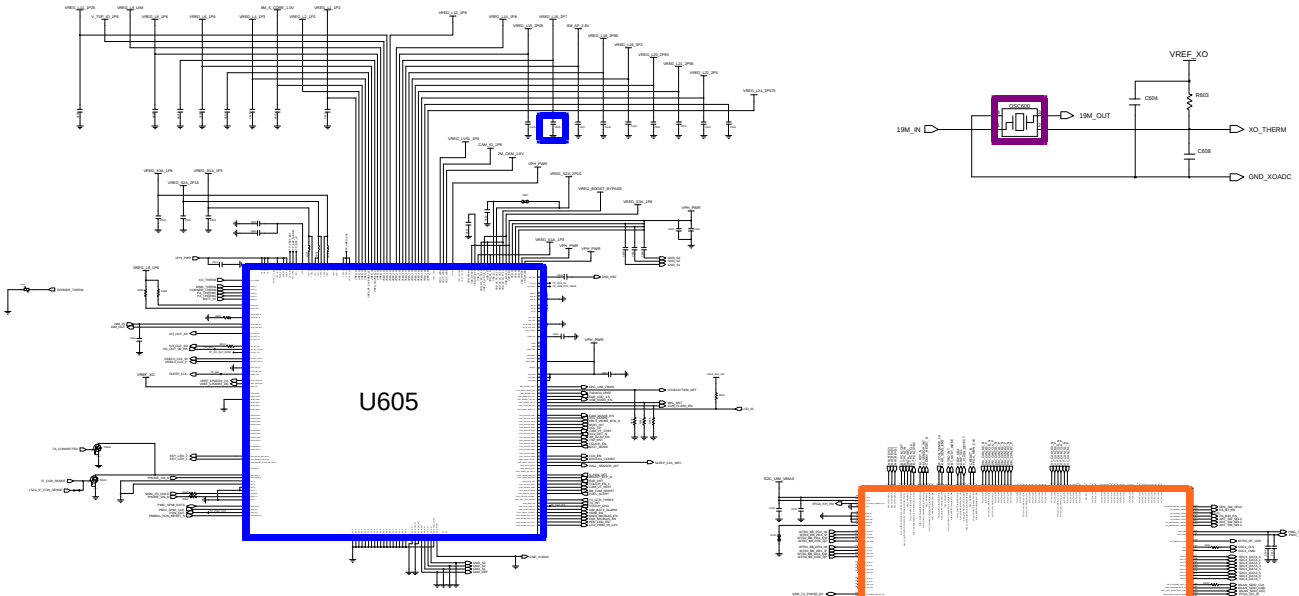

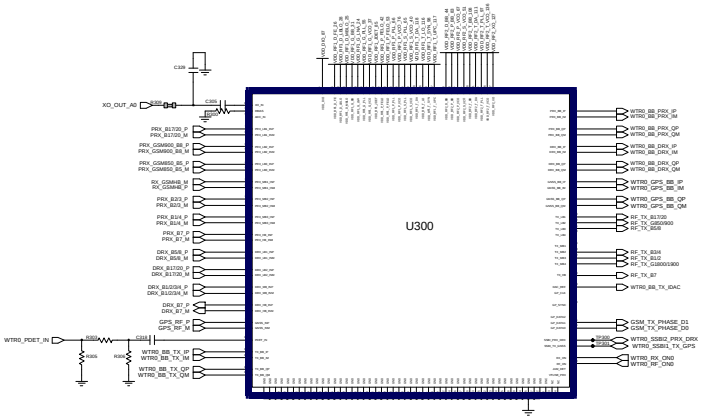

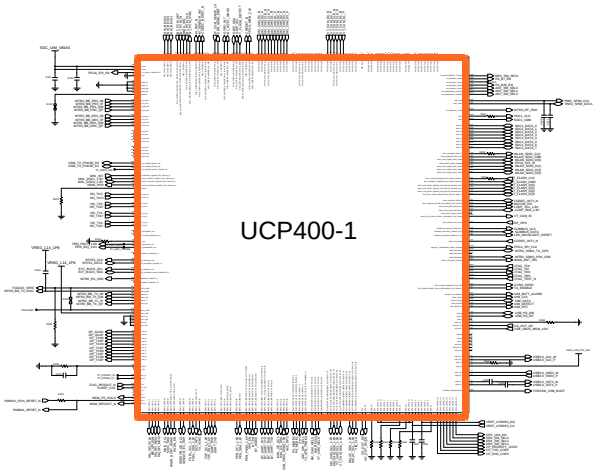

Confidential and proprietary-the contents in this service guide subject to change without prior notice.
Distribution, transmission, or infringement of any content or data from this document without Samsung's written authorization is strictly prohibited.

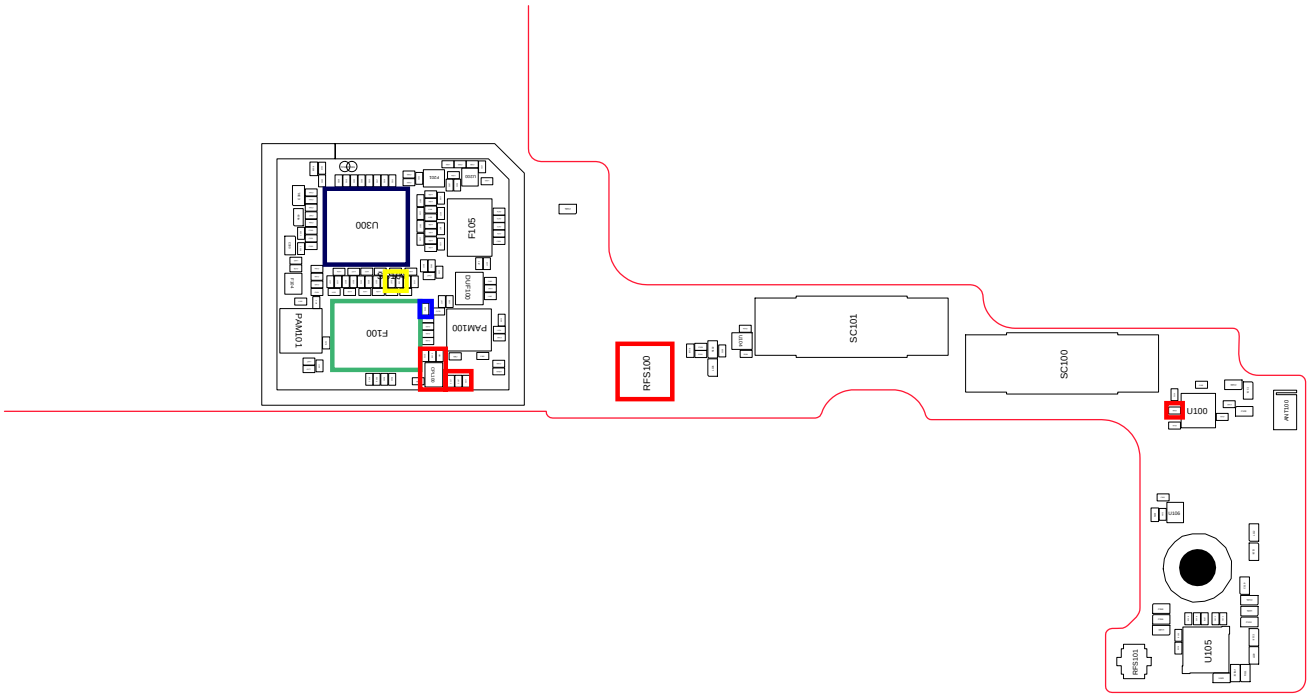

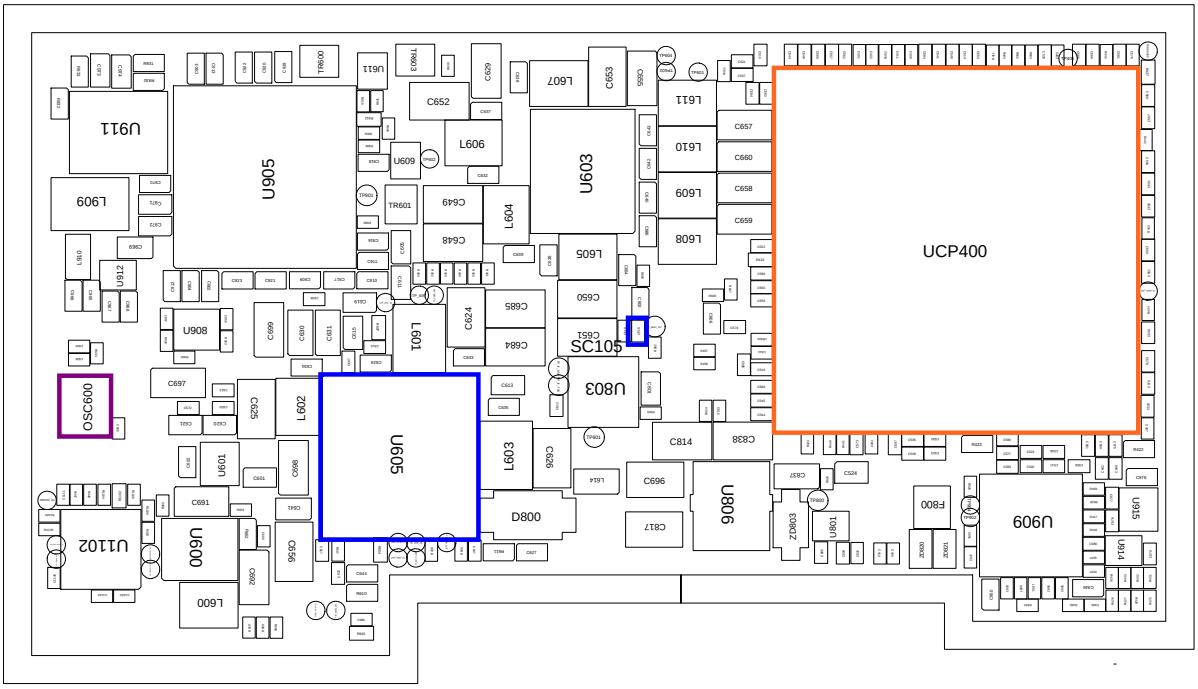

Confidential and proprietary-the contents in this service guide subject to change without prior notice.
Distribution, transmission, or infringement of any content or data from this document without Samsung's written authorization is strictly prohibited.

8-3-21. LTE Band5/ WCDMA Band5/ GSM850 RX

CONTINUOUS RX ON
RF INPUT : LTE B5: 2525CH
WCDMA B5: 4408CH
GSM850: 190CH
AMP : -50dBm

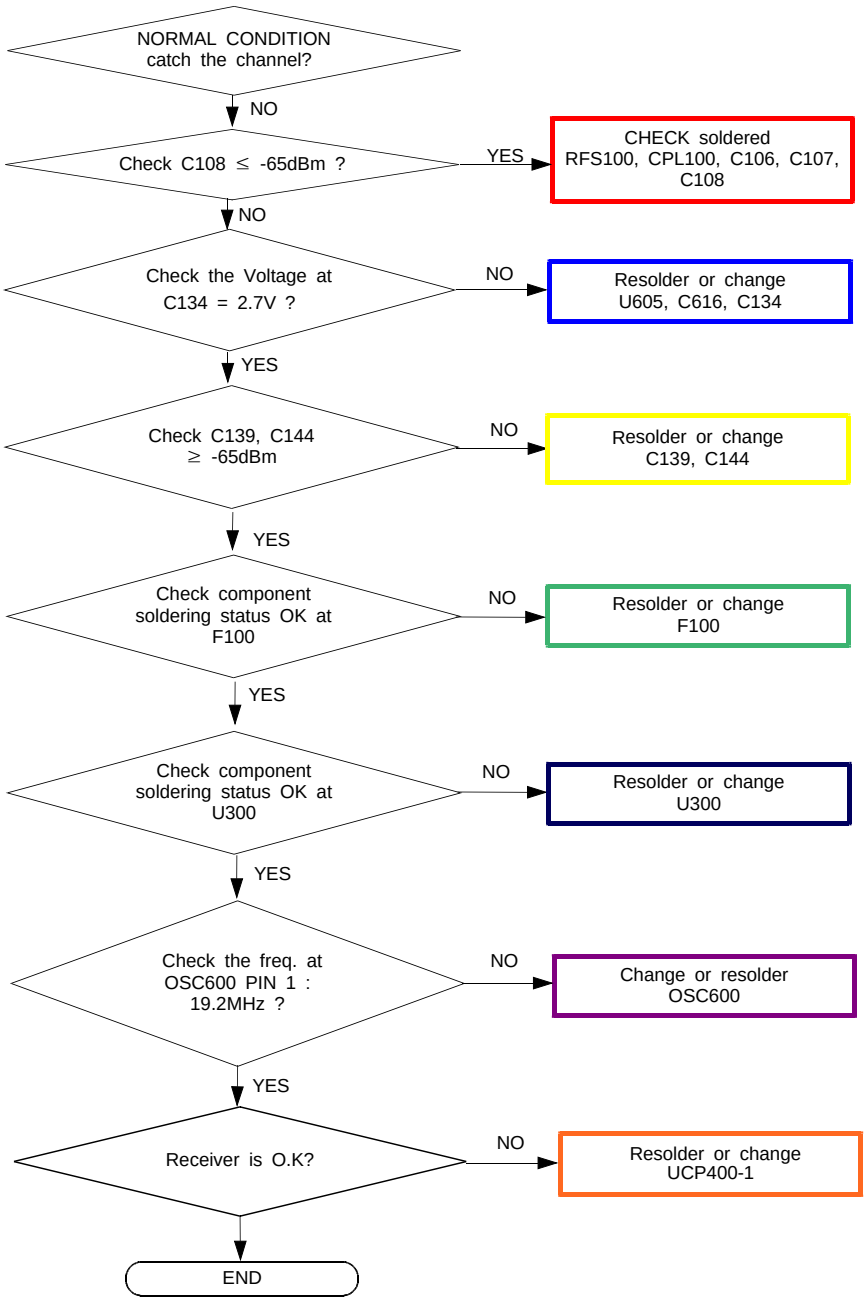

Confidential and proprietary-the contents in this service guide subject to change without prior notice.
Distribution, transmission, or infringement of any content or data from this document without Samsung's written authorization is strictly prohibited.

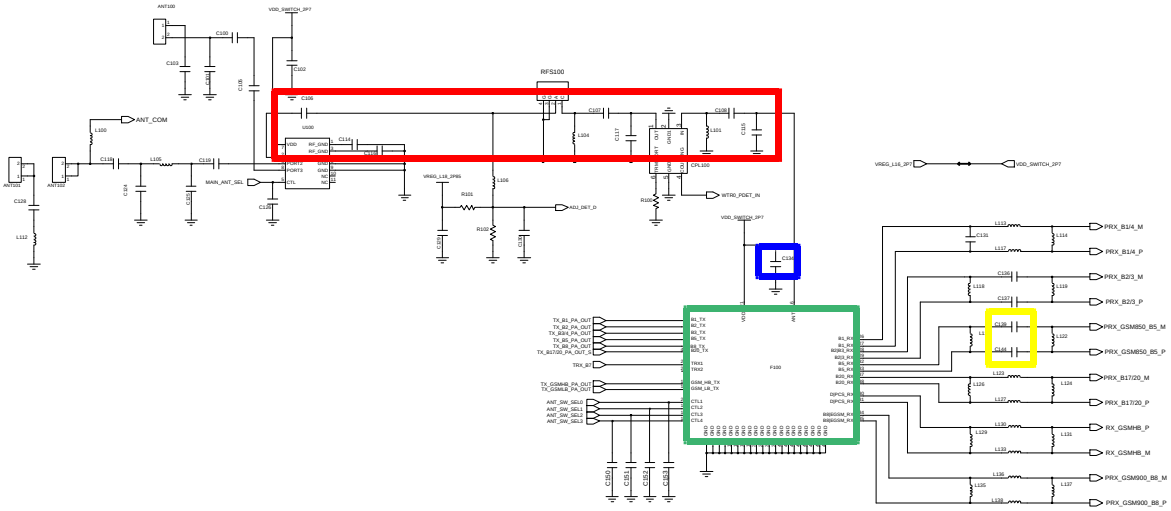

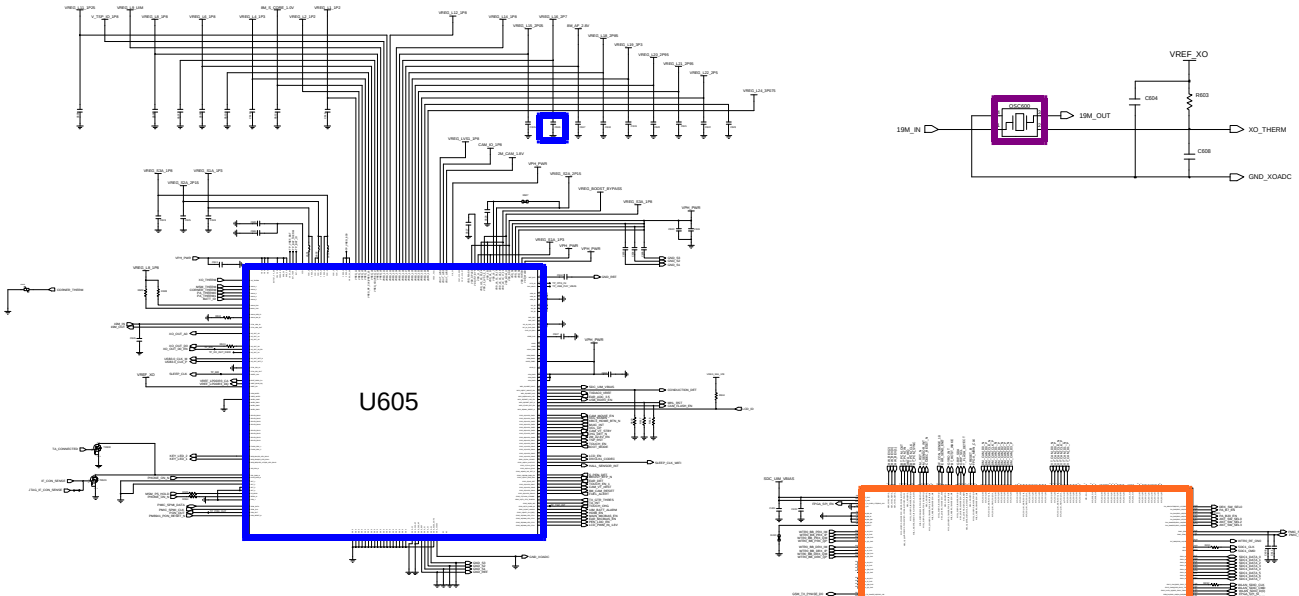

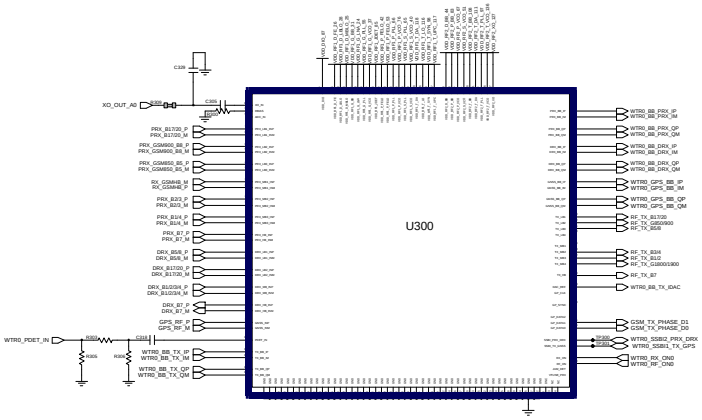

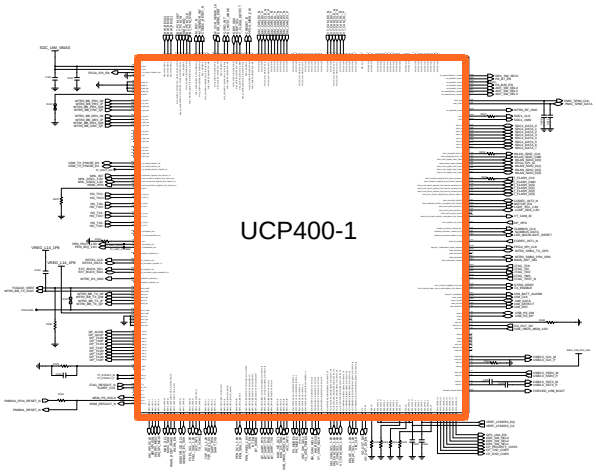

Confidential and proprietary-the contents in this service guide subject to change without prior notice.
Distribution, transmission, or infringement of any content or data from this document without Samsung's written authorization is strictly prohibited.

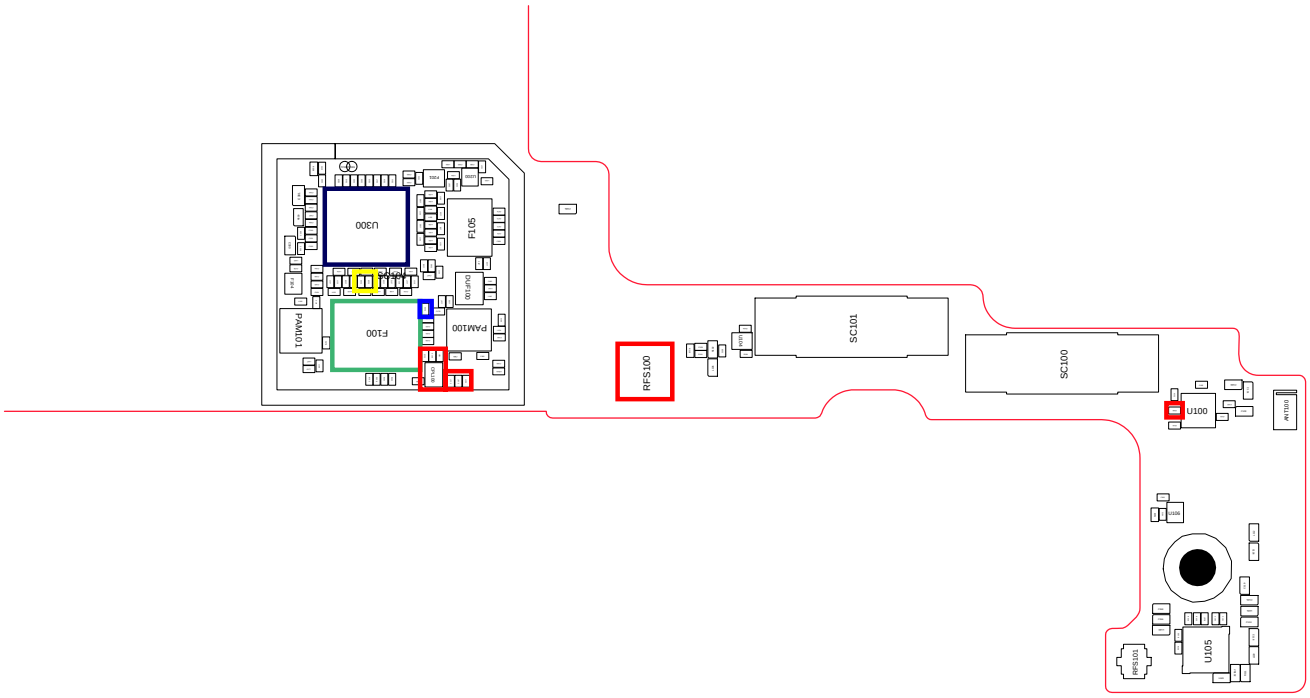

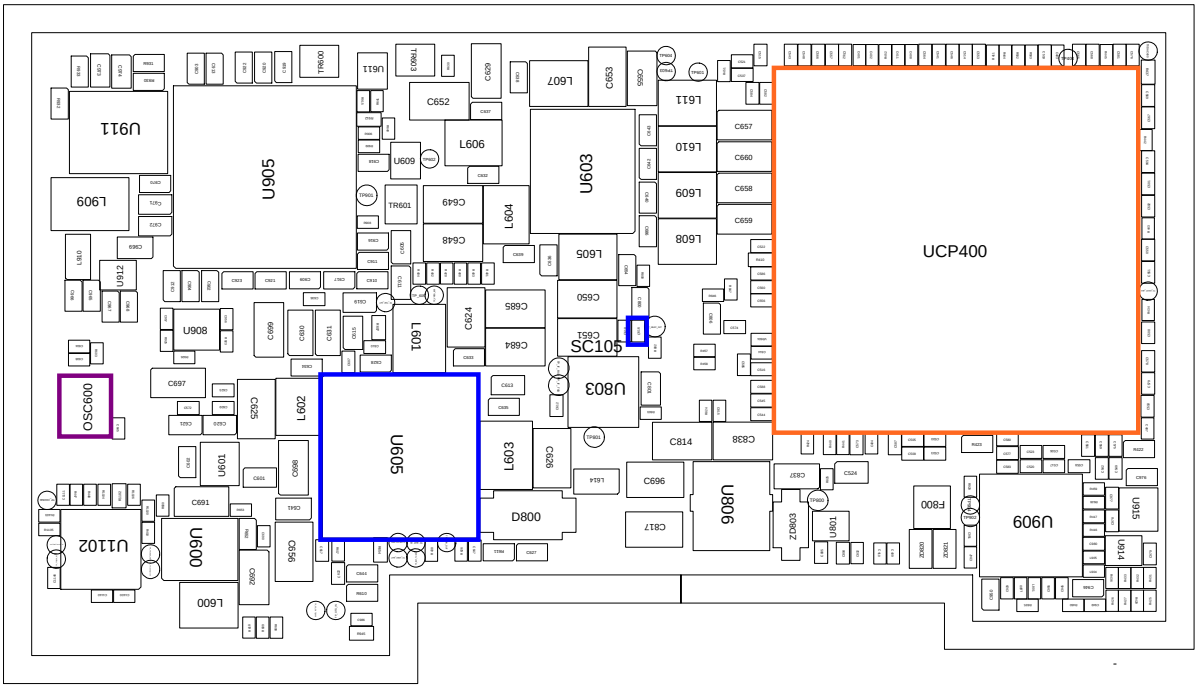

Confidential and proprietary-the contents in this service guide subject to change without prior notice.
Distribution, transmission, or infringement of any content or data from this document without Samsung's written authorization is strictly prohibited.

8-3-22. LTE Band8/ WCDMA Band8/ GSM900 RX

CONTINUOUS RX ON
RF INPUT : LTE B8: 3625CH
WCDMA B8: 3013CH
GSM900: 62CH
AMP : -50dBm

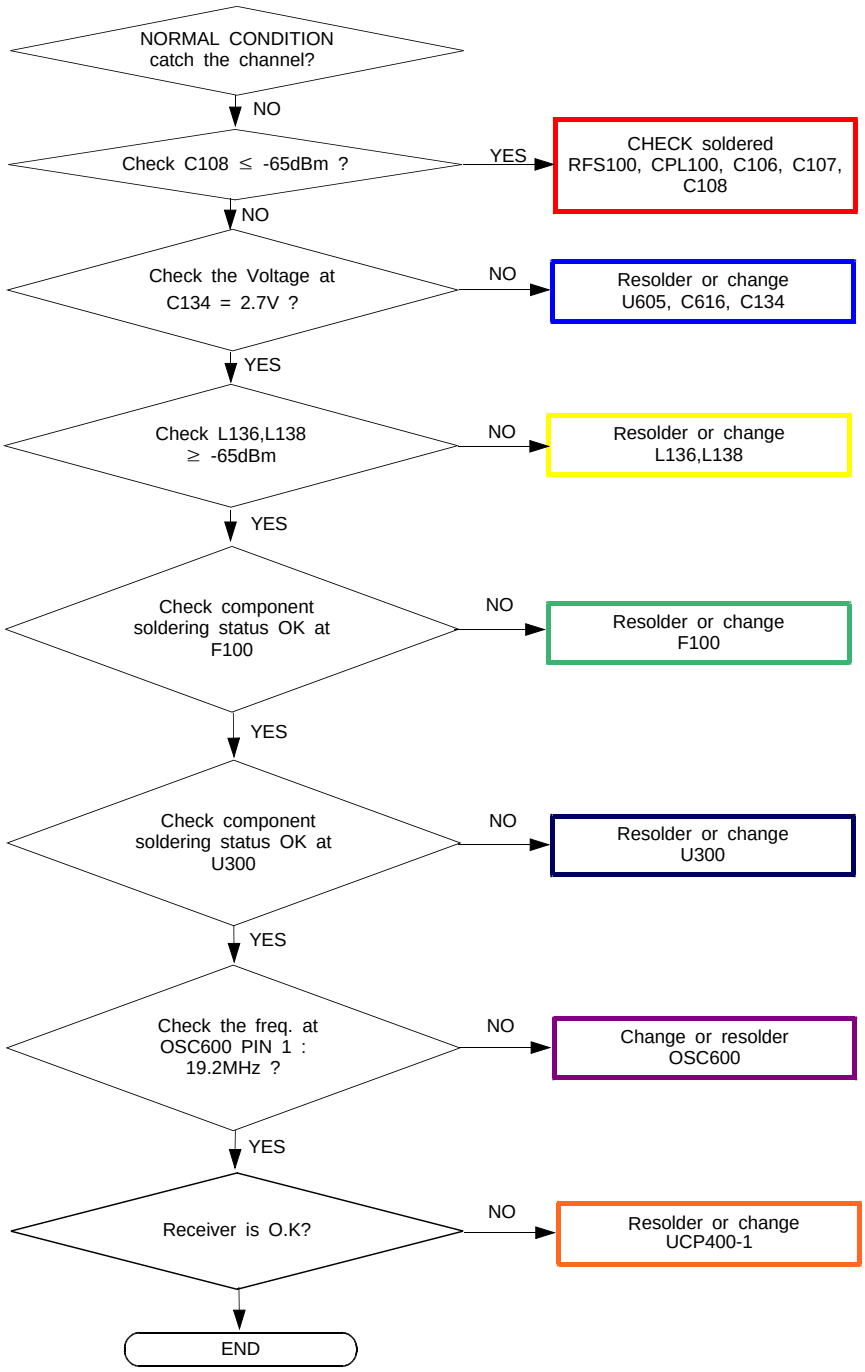

Confidential and proprietary-the contents in this service guide subject to change without prior notice.
Distribution, transmission, or infringement of any content or data from this document without Samsung's written authorization is strictly prohibited.

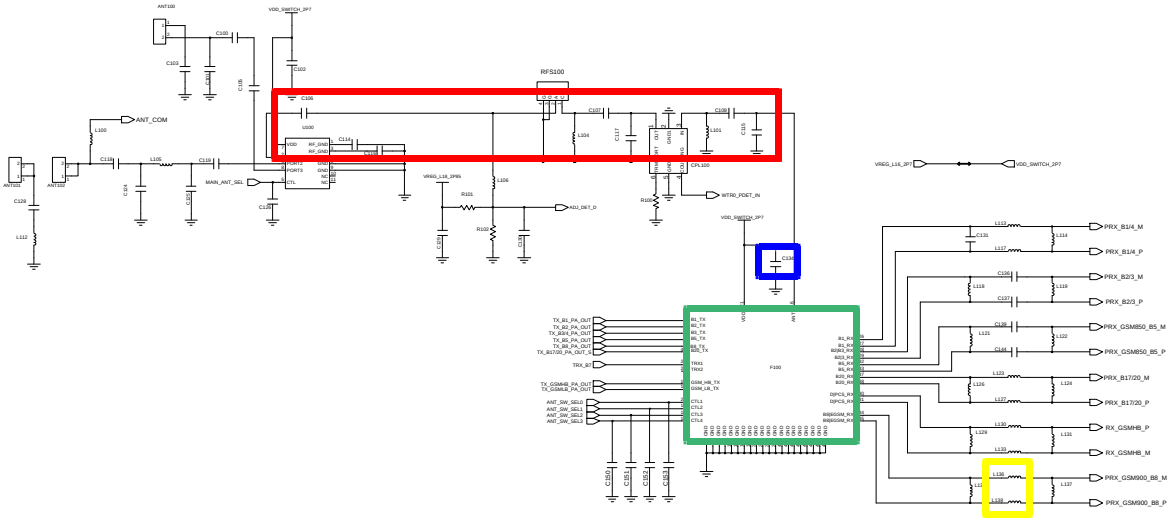

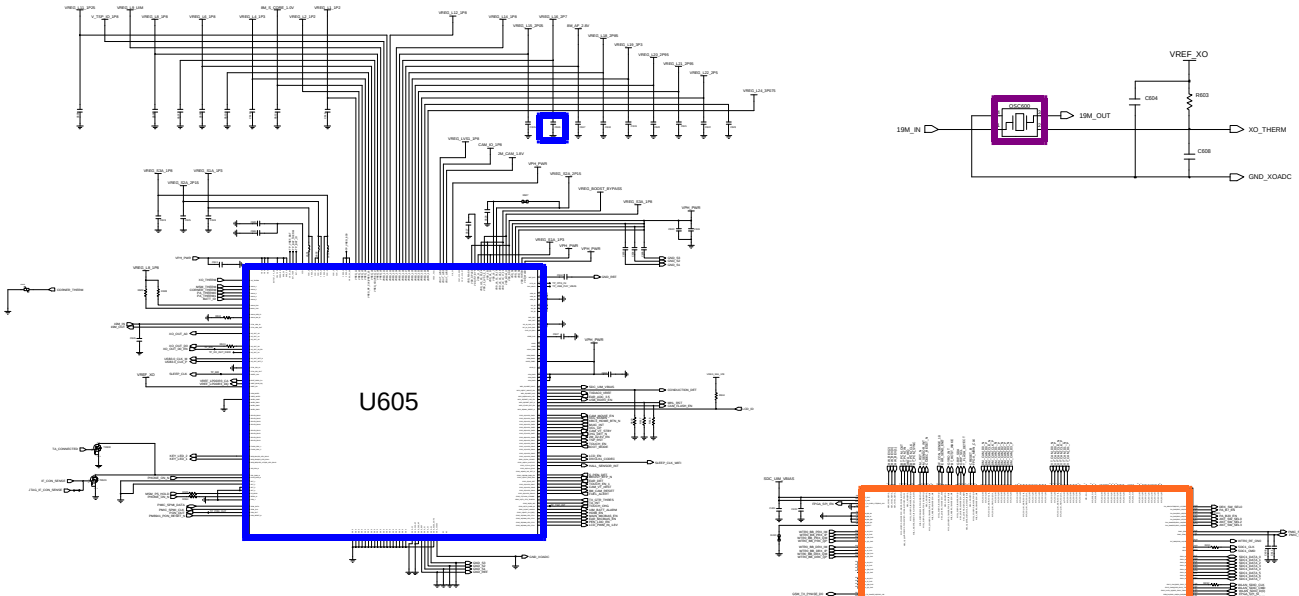

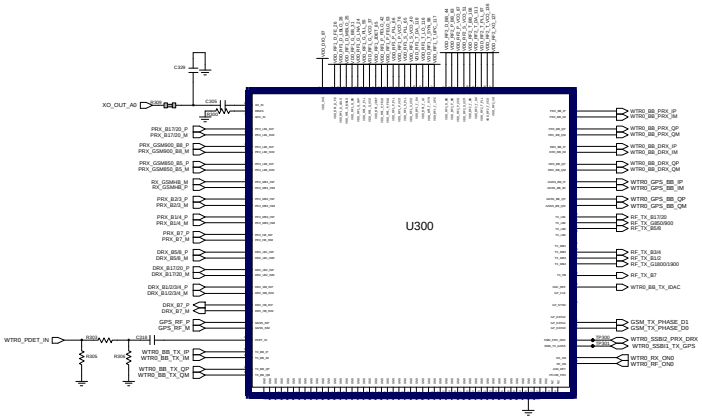

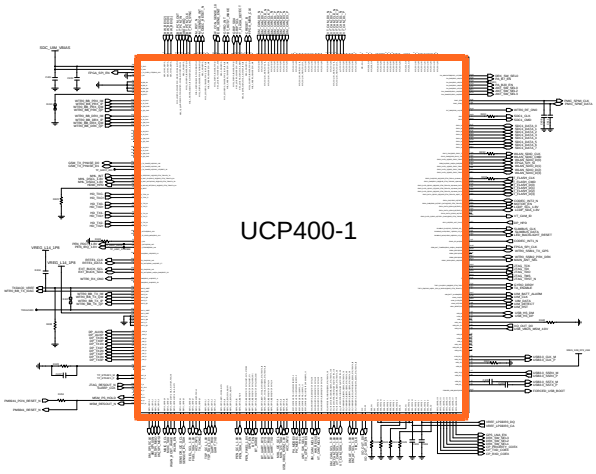

Confidential and proprietary-the contents in this service guide subject to change without prior notice.
Distribution, transmission, or infringement of any content or data from this document without Samsung's written authorization is strictly prohibited.

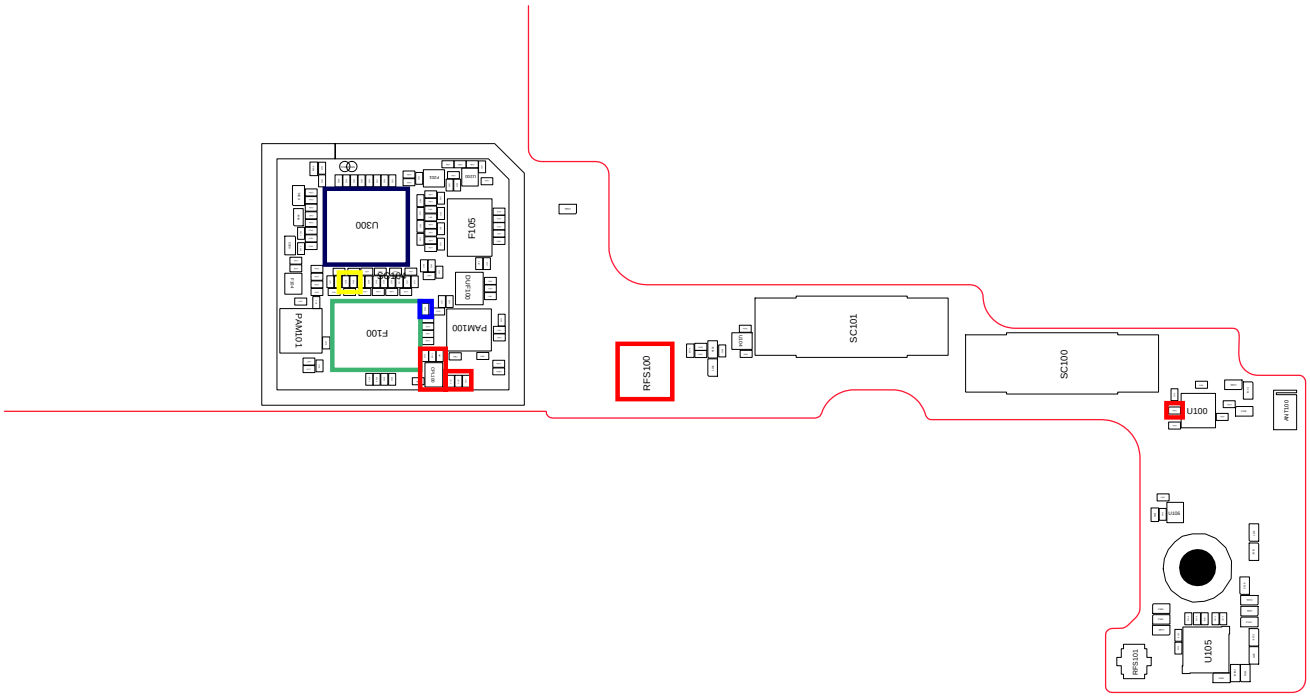

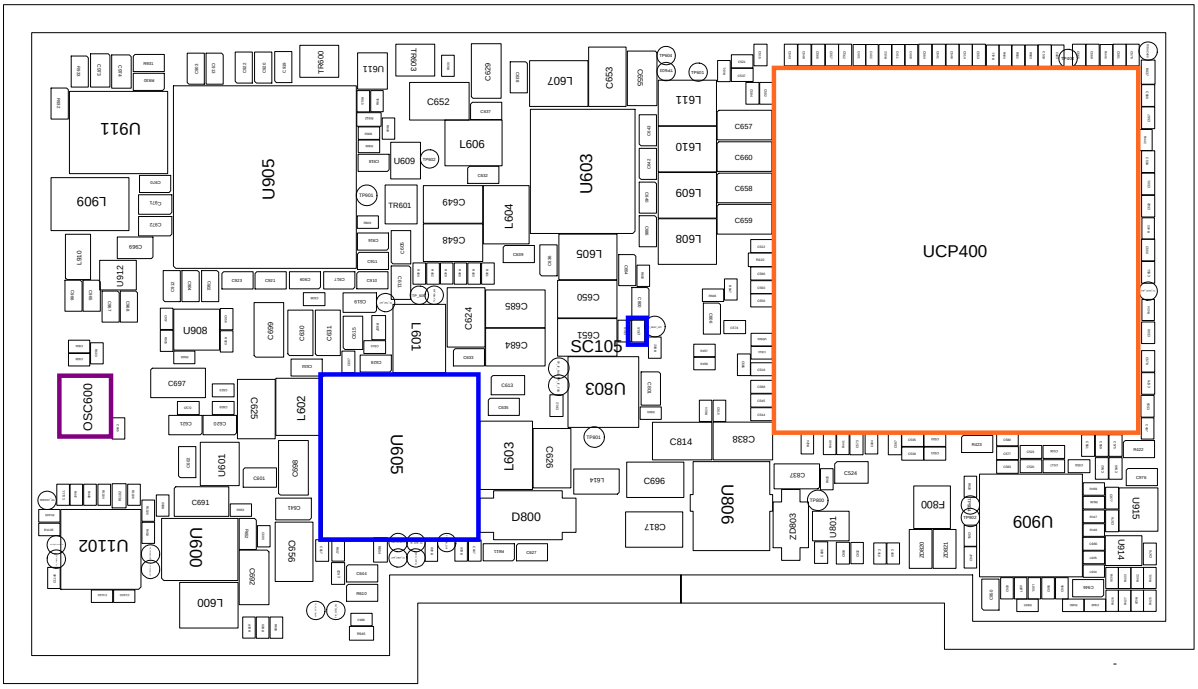

Confidential and proprietary-the contents in this service guide subject to change without prior notice.
Distribution, transmission, or infringement of any content or data from this document without Samsung's written authorization is strictly prohibited.

8-3-23. GSM1800/1900 RX

CONTINUOUS RX ON
RF INPUT : DCS : 700CH
PCS : 661CH
AMP : -50dBm

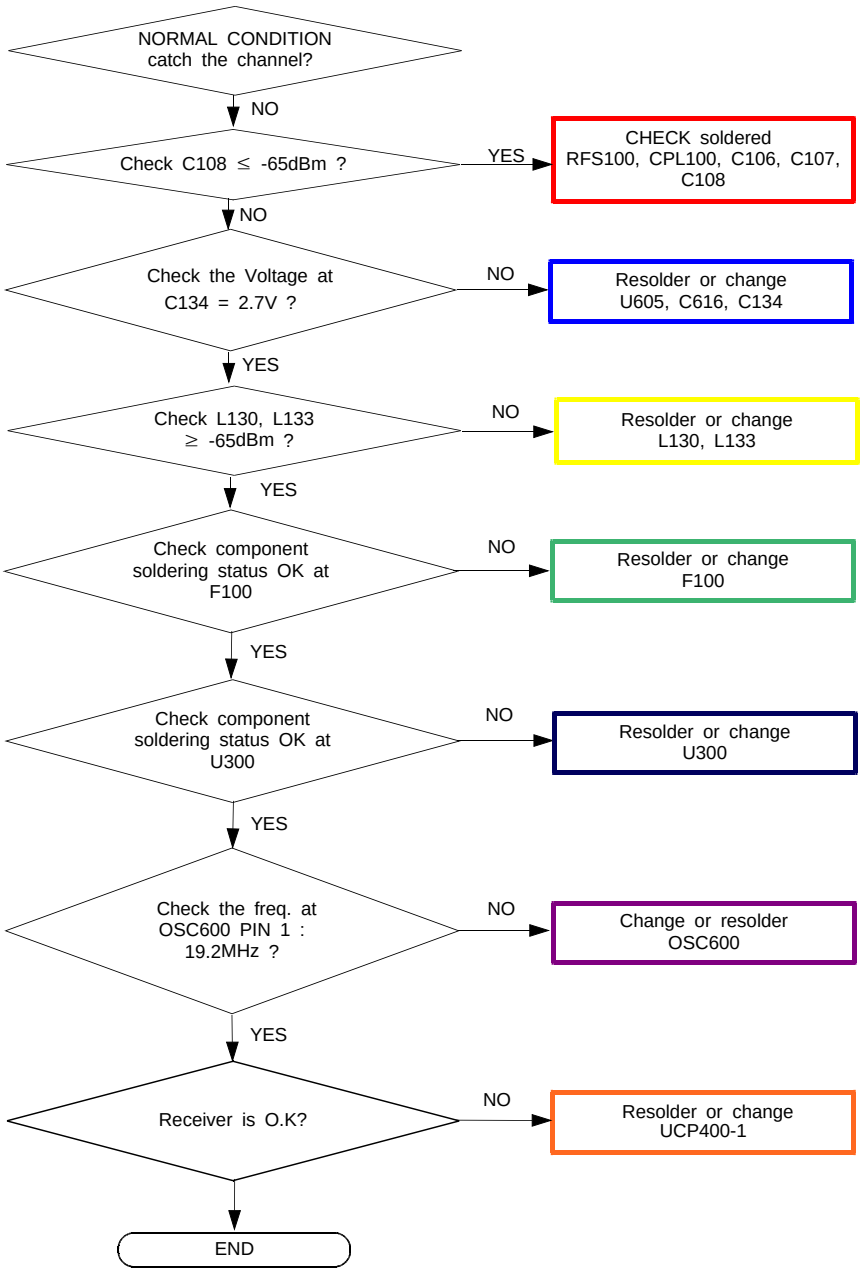

Confidential and proprietary-the contents in this service guide subject to change without prior notice.
Distribution, transmission, or infringement of any content or data from this document without Samsung's written authorization is strictly prohibited.

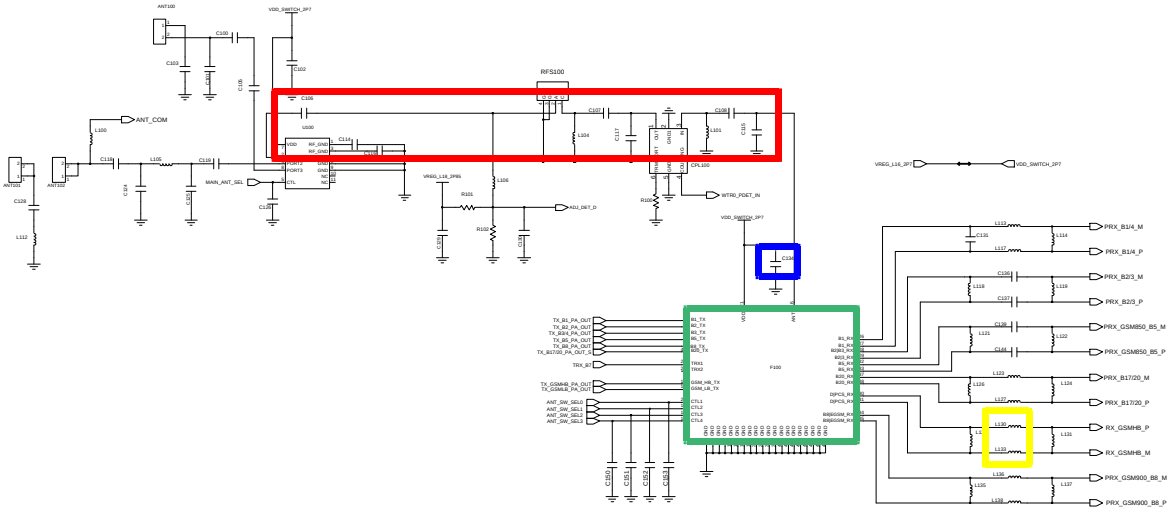

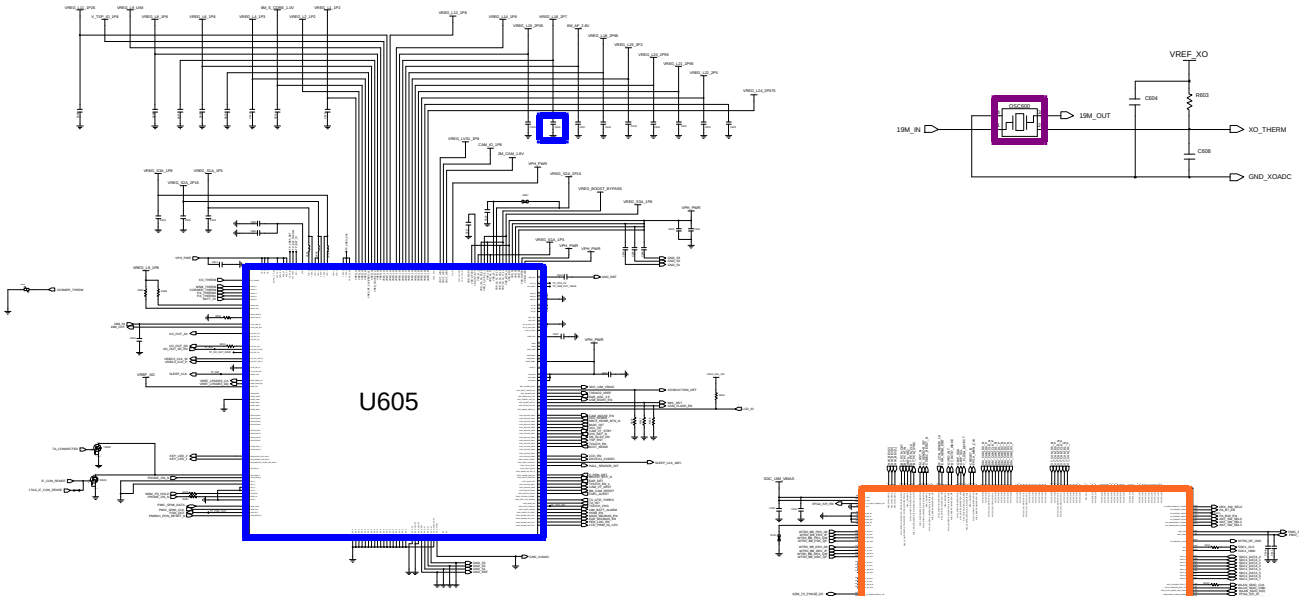

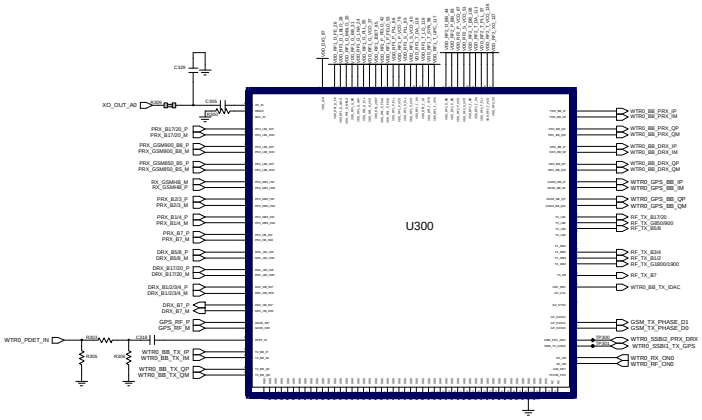

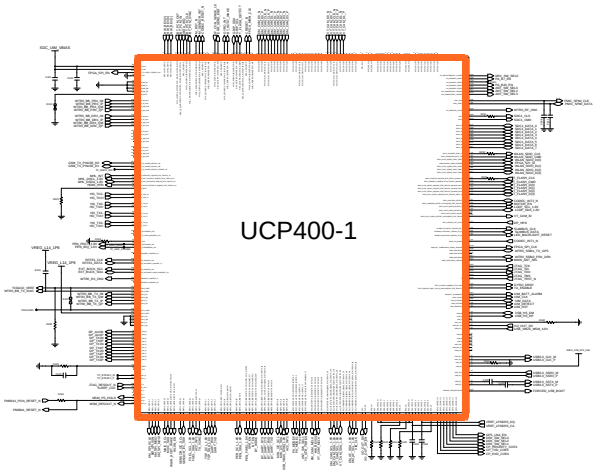

Confidential and proprietary-the contents in this service guide subject to change without prior notice.
Distribution, transmission, or infringement of any content or data from this document without Samsung's written authorization is strictly prohibited.

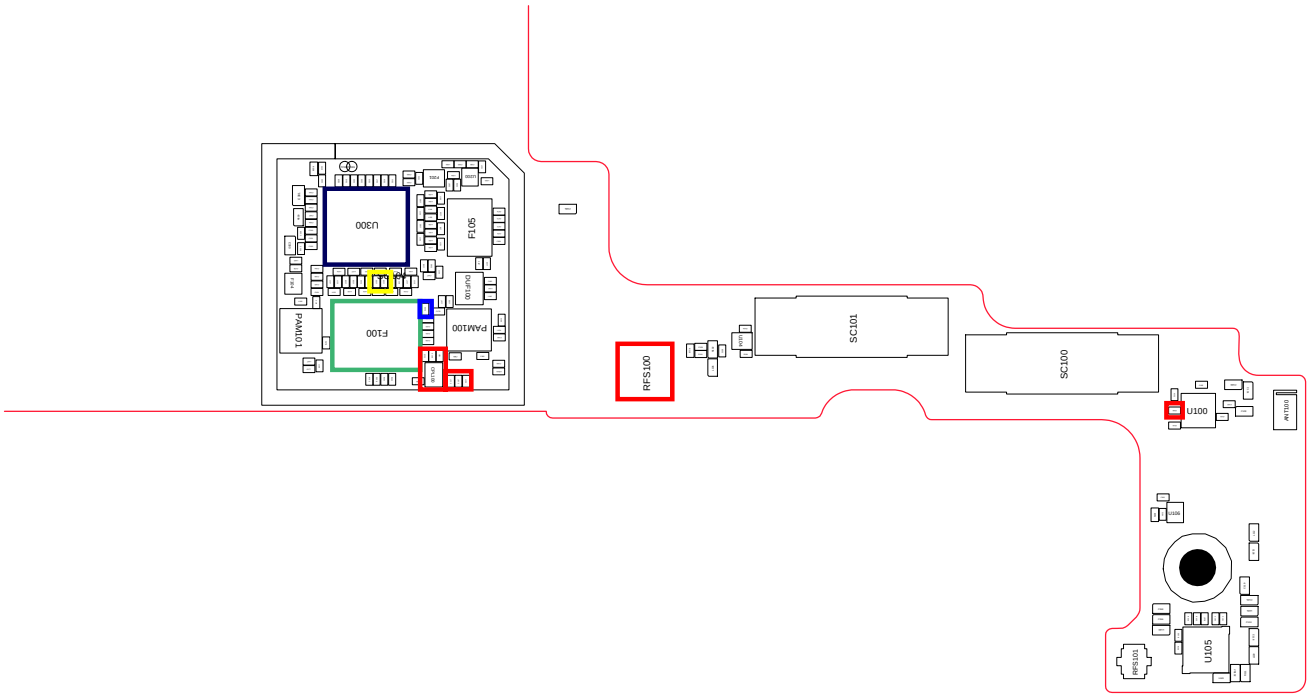

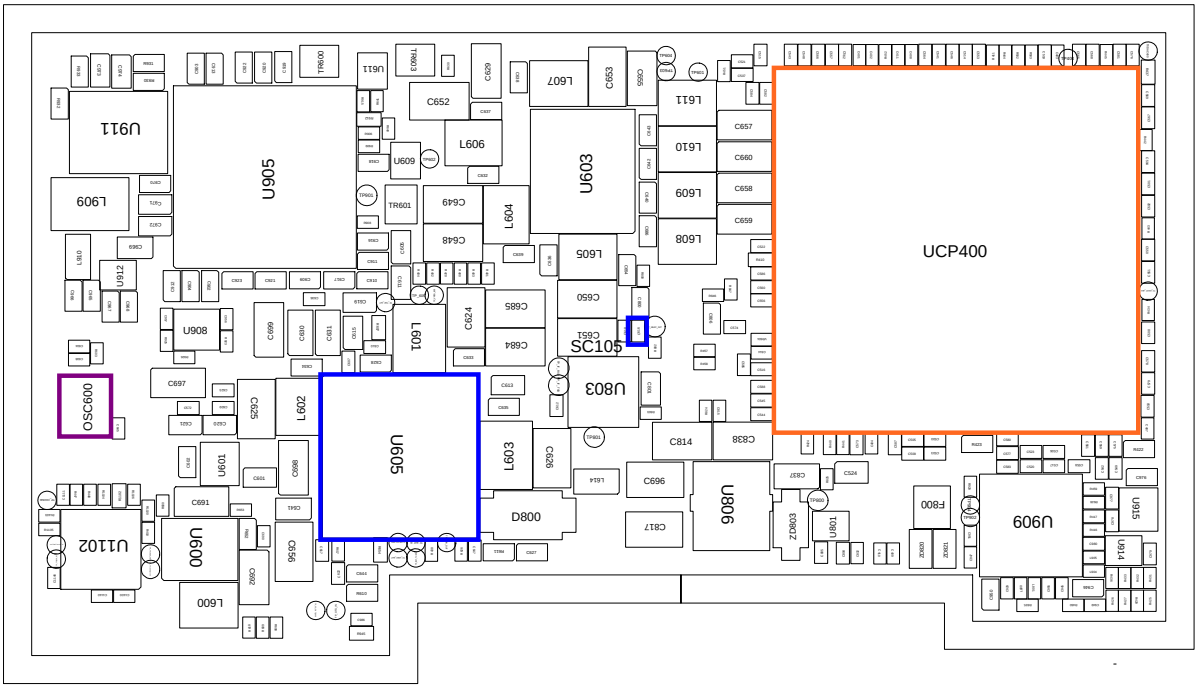

Confidential and proprietary-the contents in this service guide subject to change without prior notice.
Distribution, transmission, or infringement of any content or data from this document without Samsung's written authorization is strictly prohibited.

8-3-24. LTE Band7 RX

CONTINUOUS RX ON
RF INPUT : LTE B7: 3100CH
AMP : -50dBm

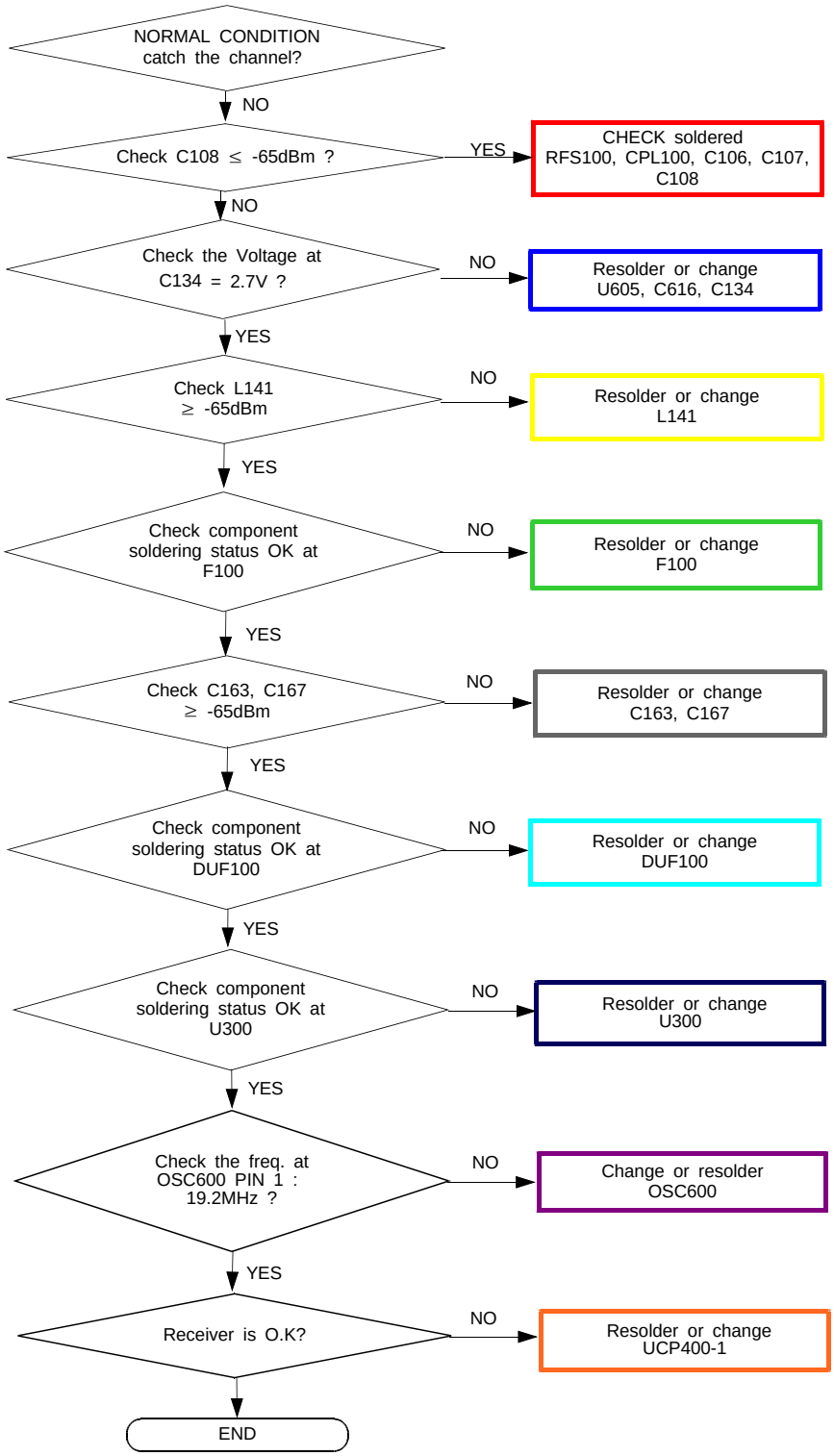

Confidential and proprietary-the contents in this service guide subject to change without prior notice.
Distribution, transmission, or infringement of any content or data from this document without Samsung's written authorization is strictly prohibited.

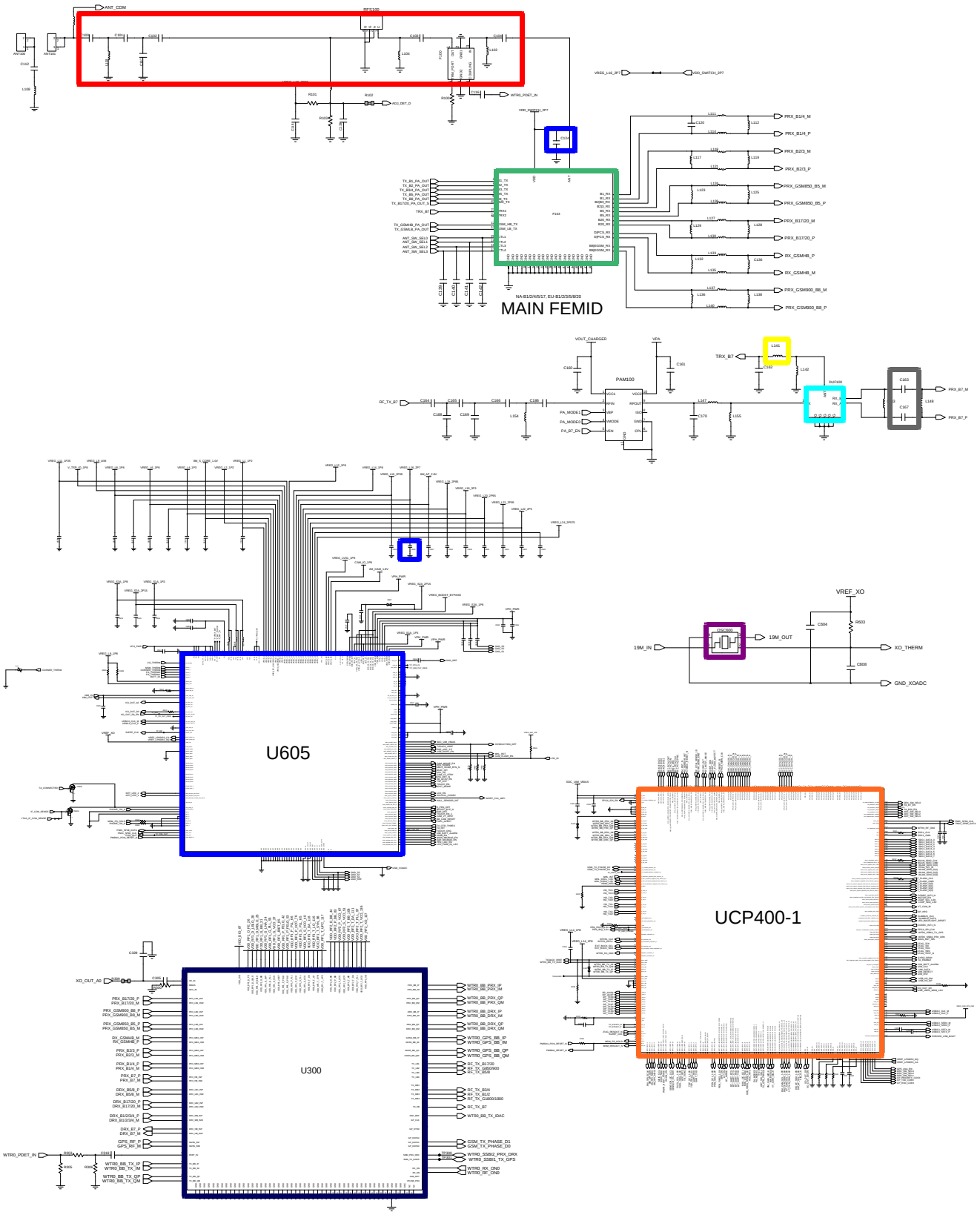

Confidential and proprietary-the contents in this service guide subject to change without prior notice.
Distribution, transmission, or infringement of any content or data from this document without Samsung's written authorization is strictly prohibited.

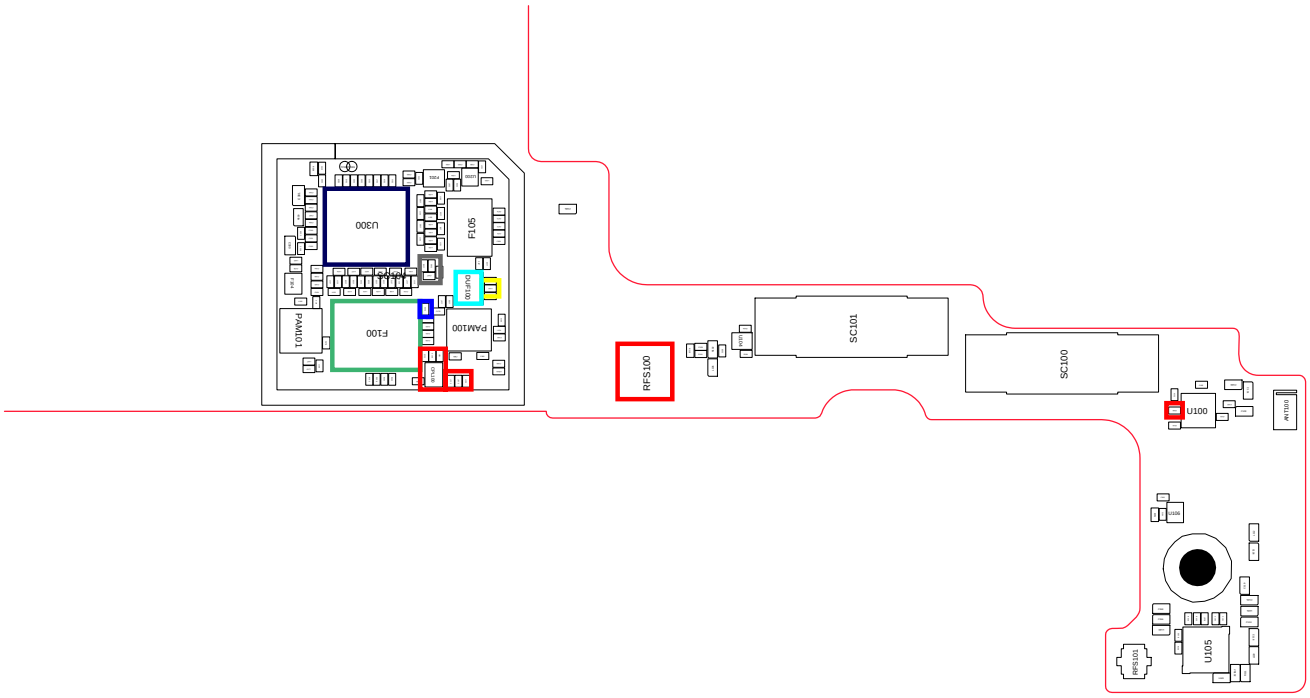

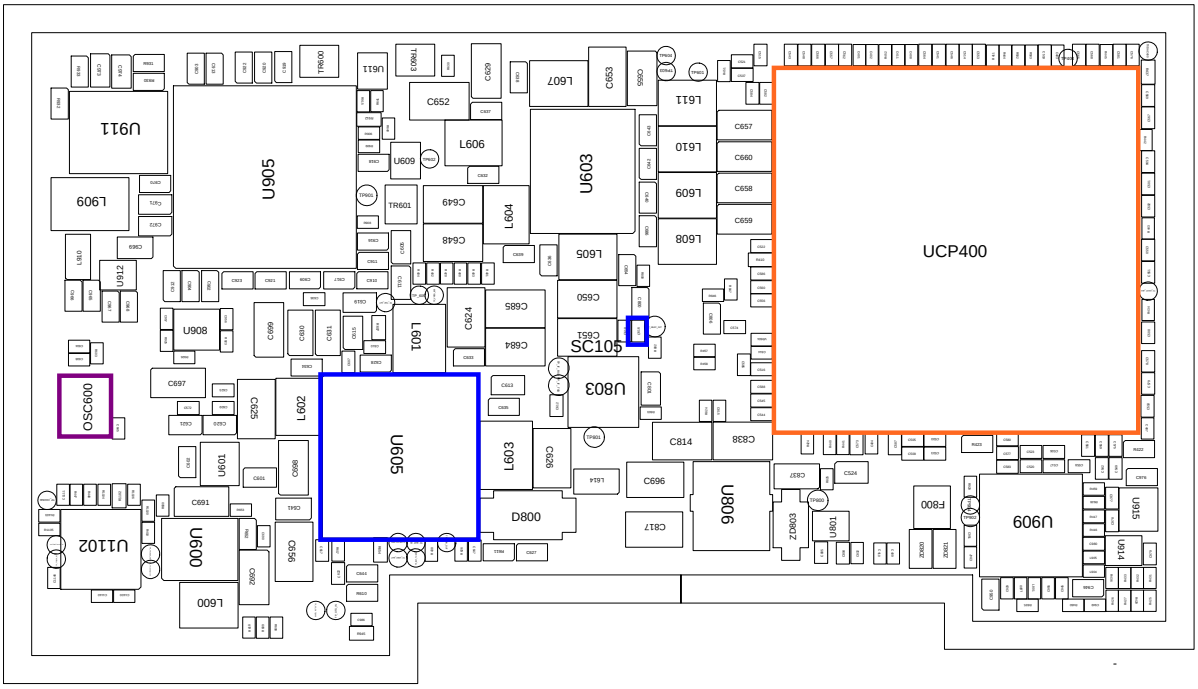

Confidential and proprietary-the contents in this service guide subject to change without prior notice.
Distribution, transmission, or infringement of any content or data from this document without Samsung's written authorization is strictly prohibited.

8-3-25. LTE Band20 RX

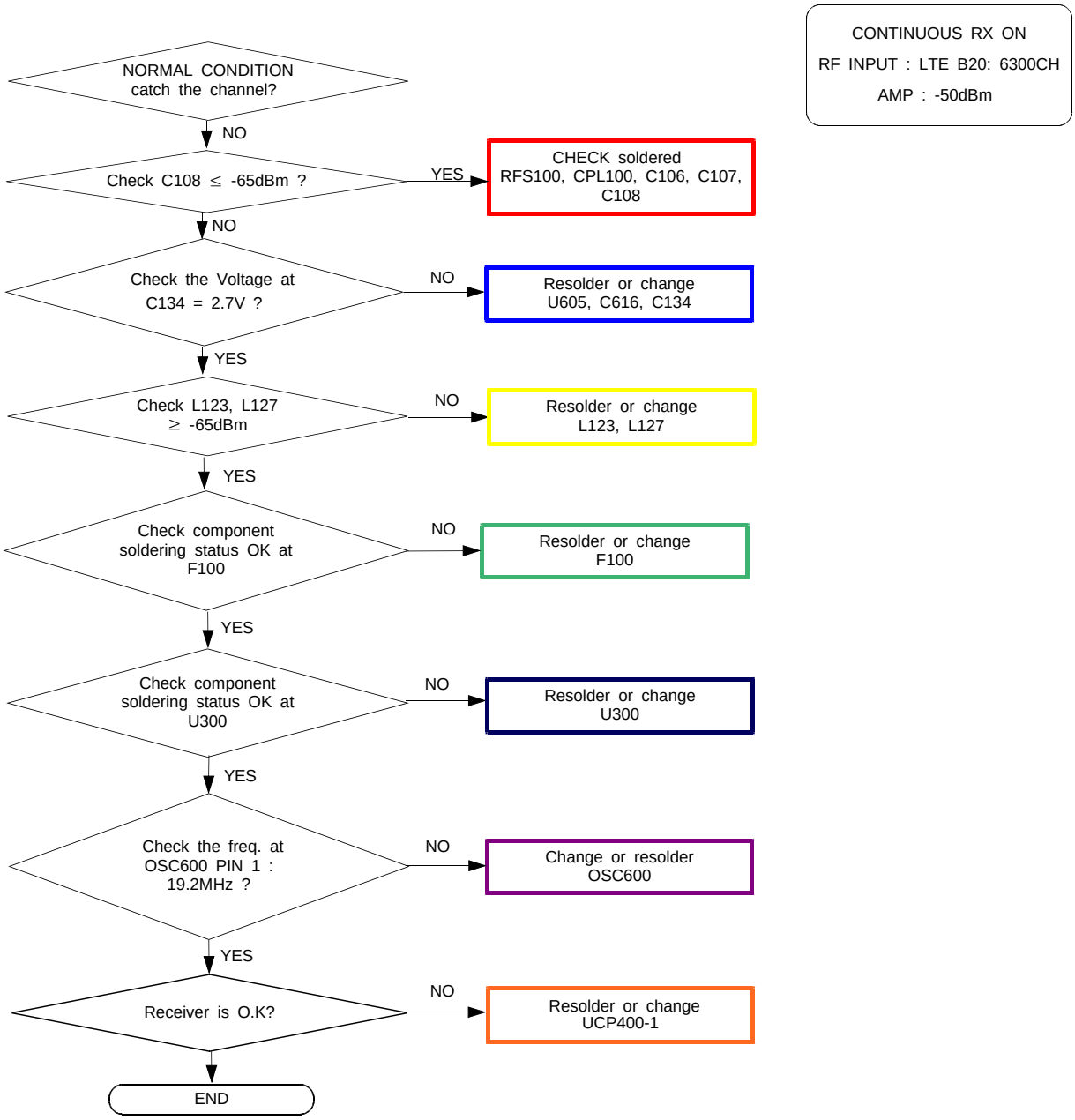

Confidential and proprietary-the contents in this service guide subject to change without prior notice.
Distribution, transmission, or infringement of any content or data from this document without Samsung's written authorization is strictly prohibited.

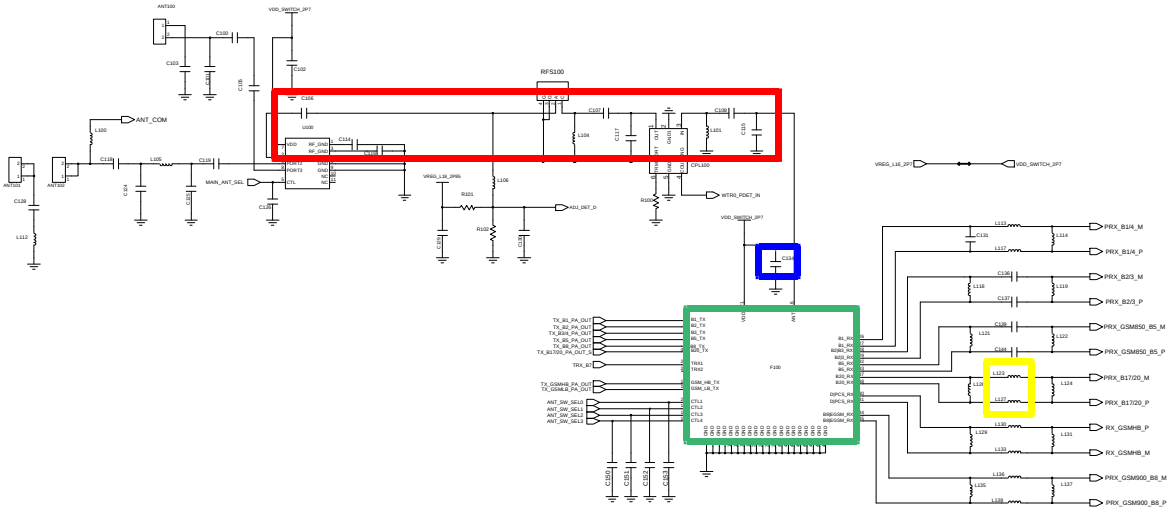

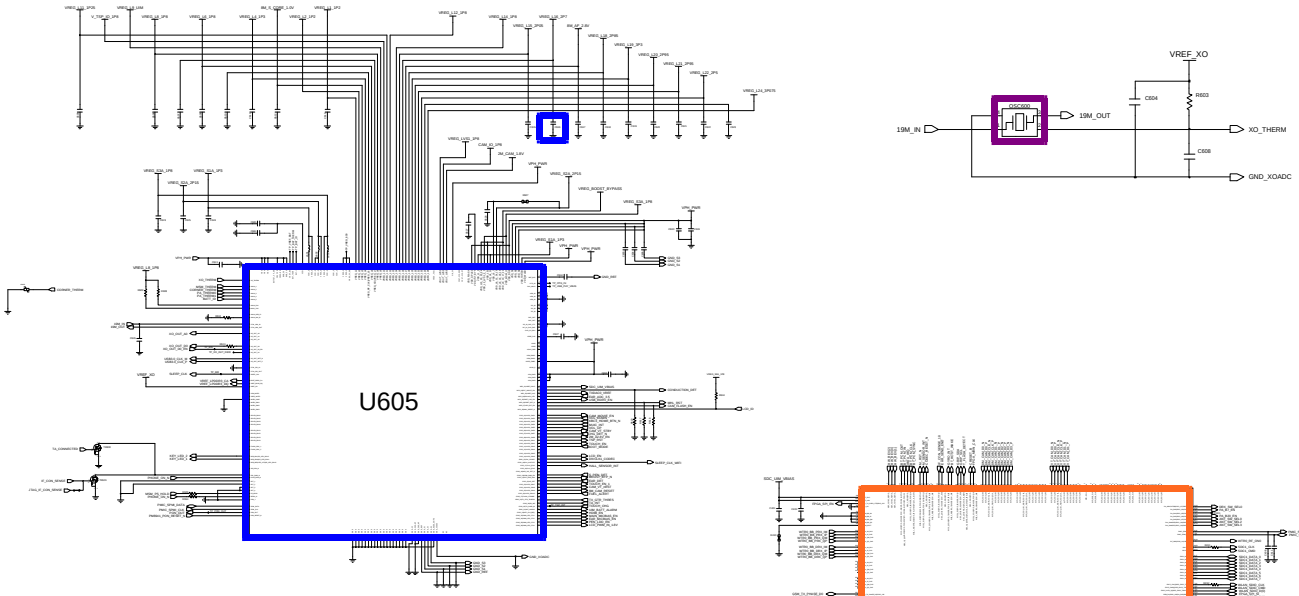

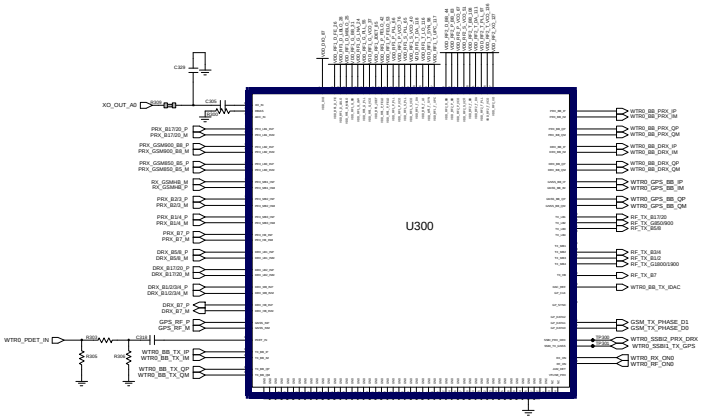

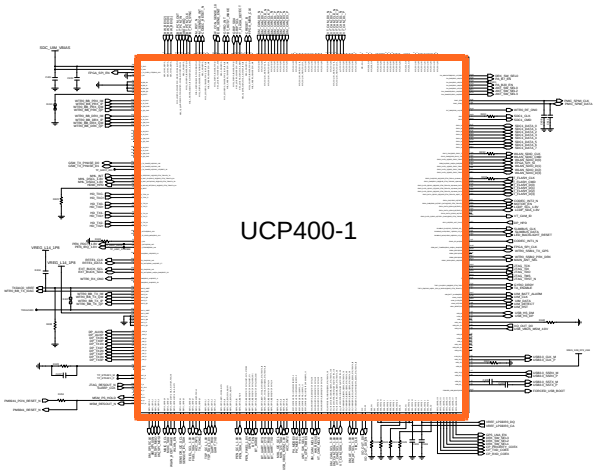

Confidential and proprietary-the contents in this service guide subject to change without prior notice.
Distribution, transmission, or infringement of any content or data from this document without Samsung's written authorization is strictly prohibited.

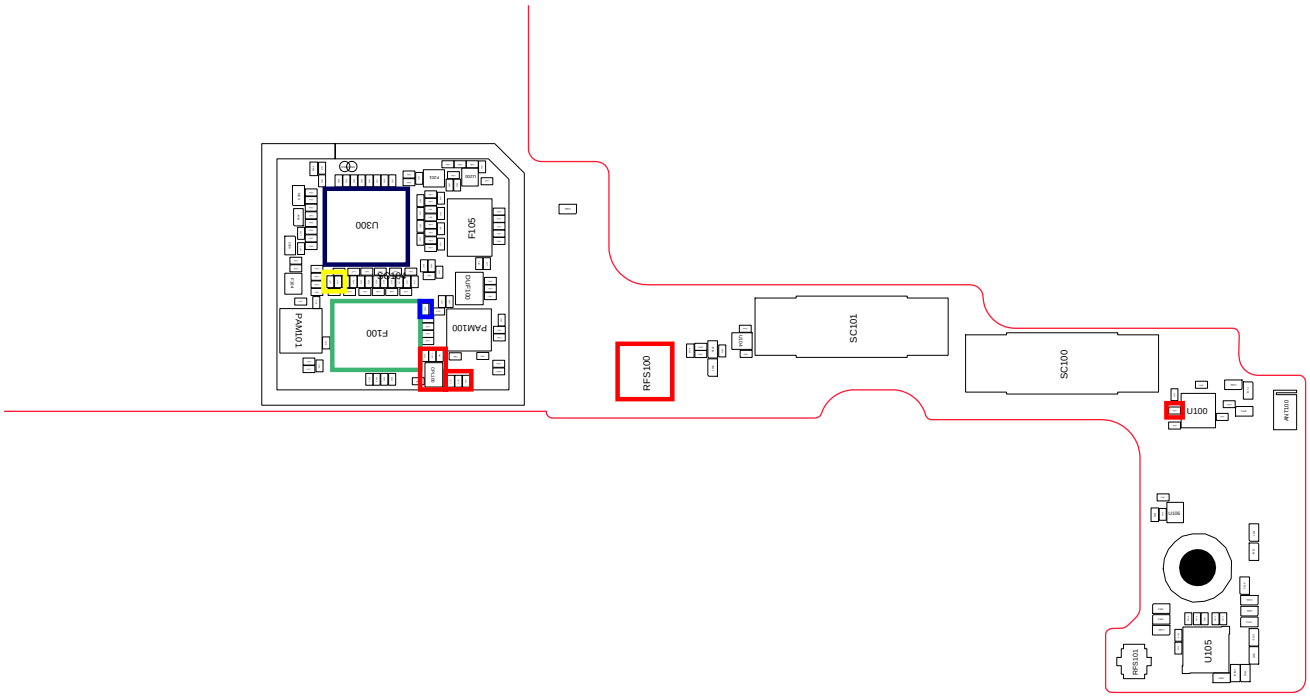

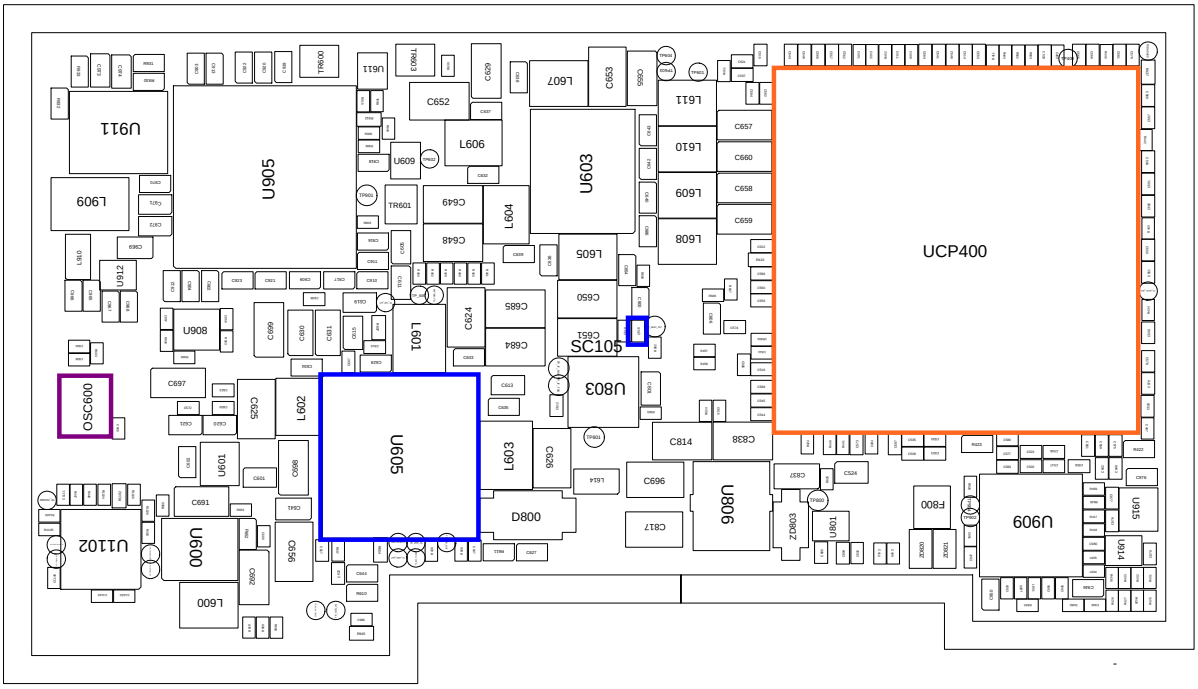

Confidential and proprietary-the contents in this service guide subject to change without prior notice.
Distribution, transmission, or infringement of any content or data from this document without Samsung's written authorization is strictly prohibited.

8-3-26. GSM850/ GSM900 TX

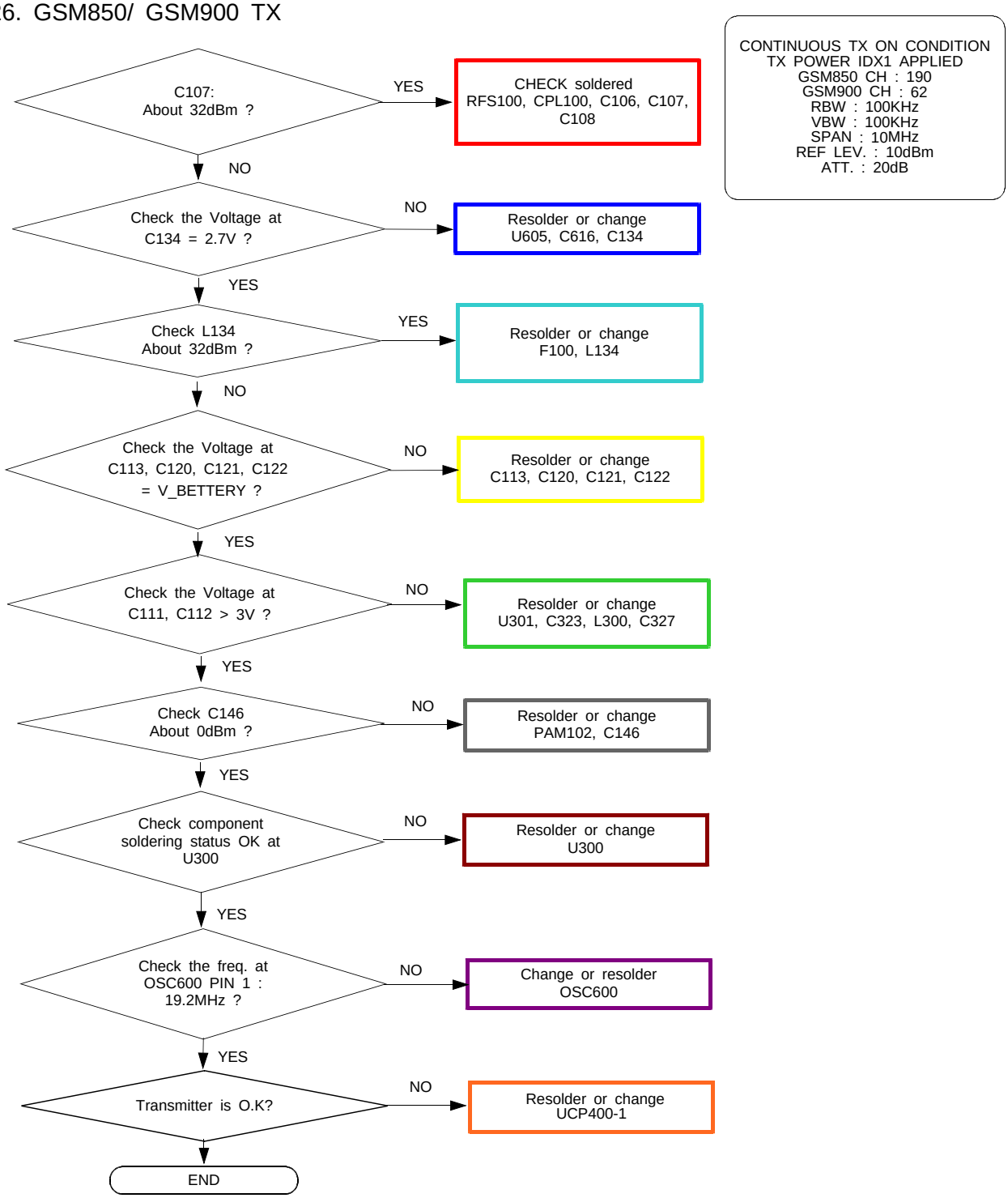

Confidential and proprietary-the contents in this service guide subject to change without prior notice.
Distribution, transmission, or infringement of any content or data from this document without Samsung's written authorization is strictly prohibited.

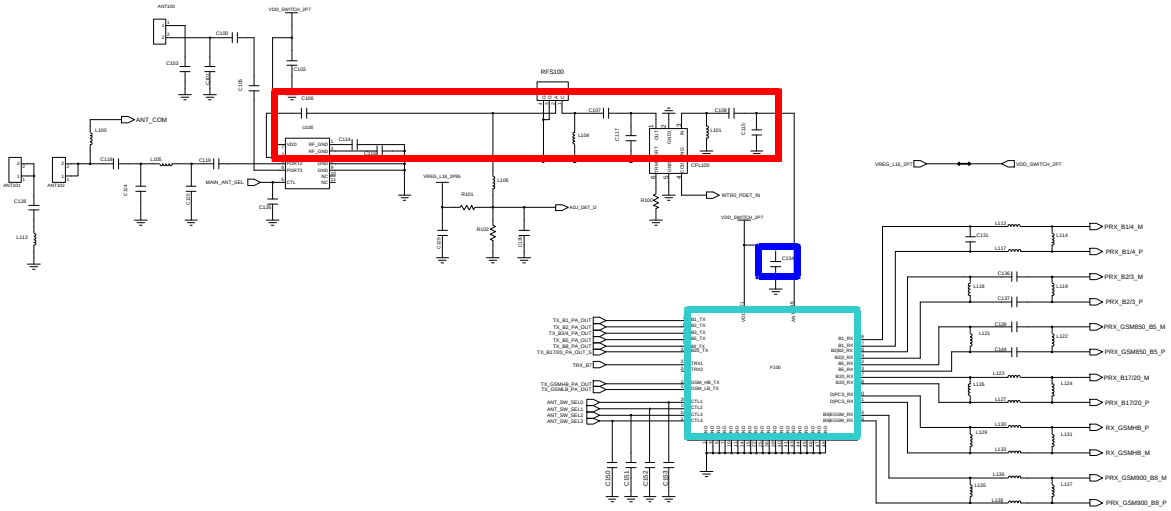

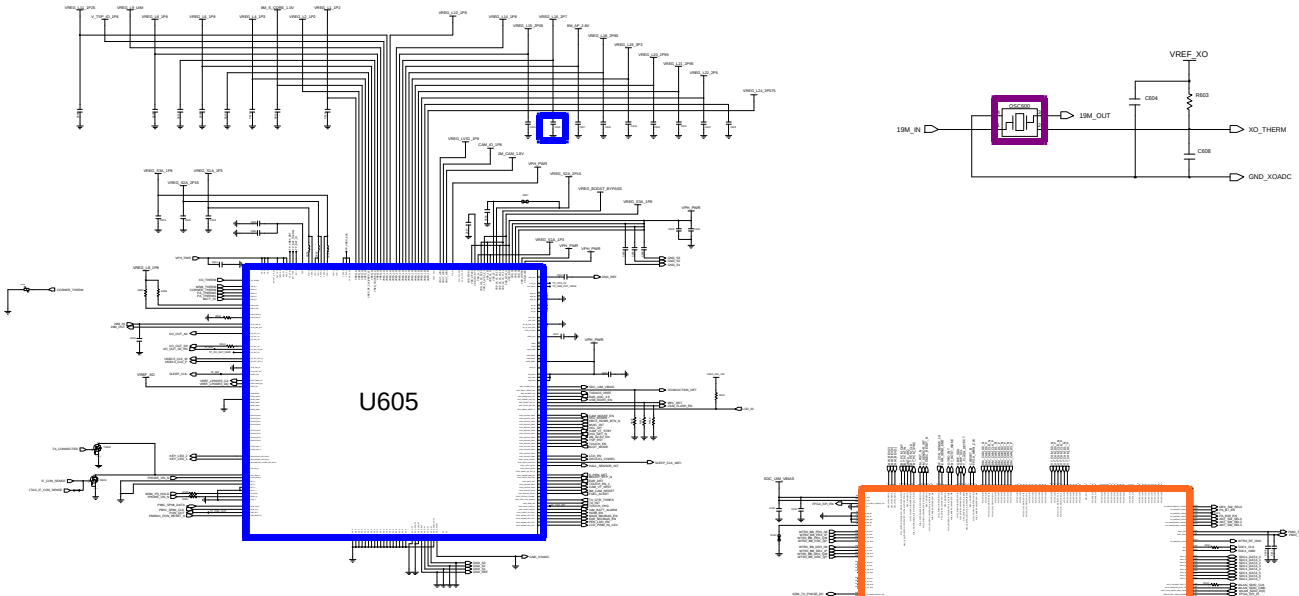

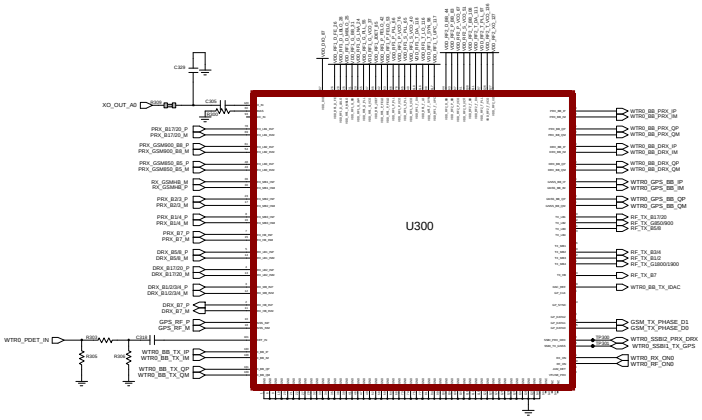

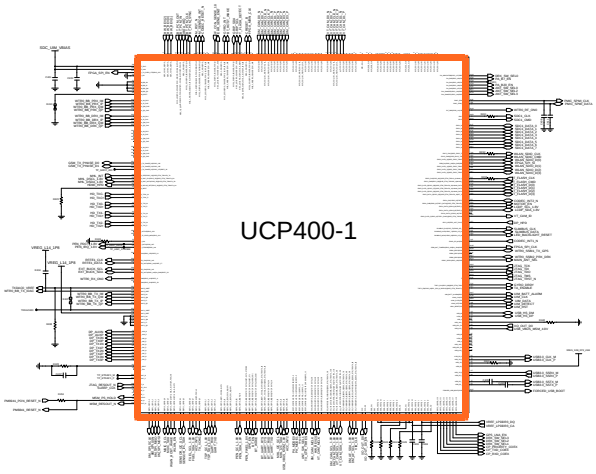

Confidential and proprietary-the contents in this service guide subject to change without prior notice.
Distribution, transmission, or infringement of any content or data from this document without Samsung's written authorization is strictly prohibited.

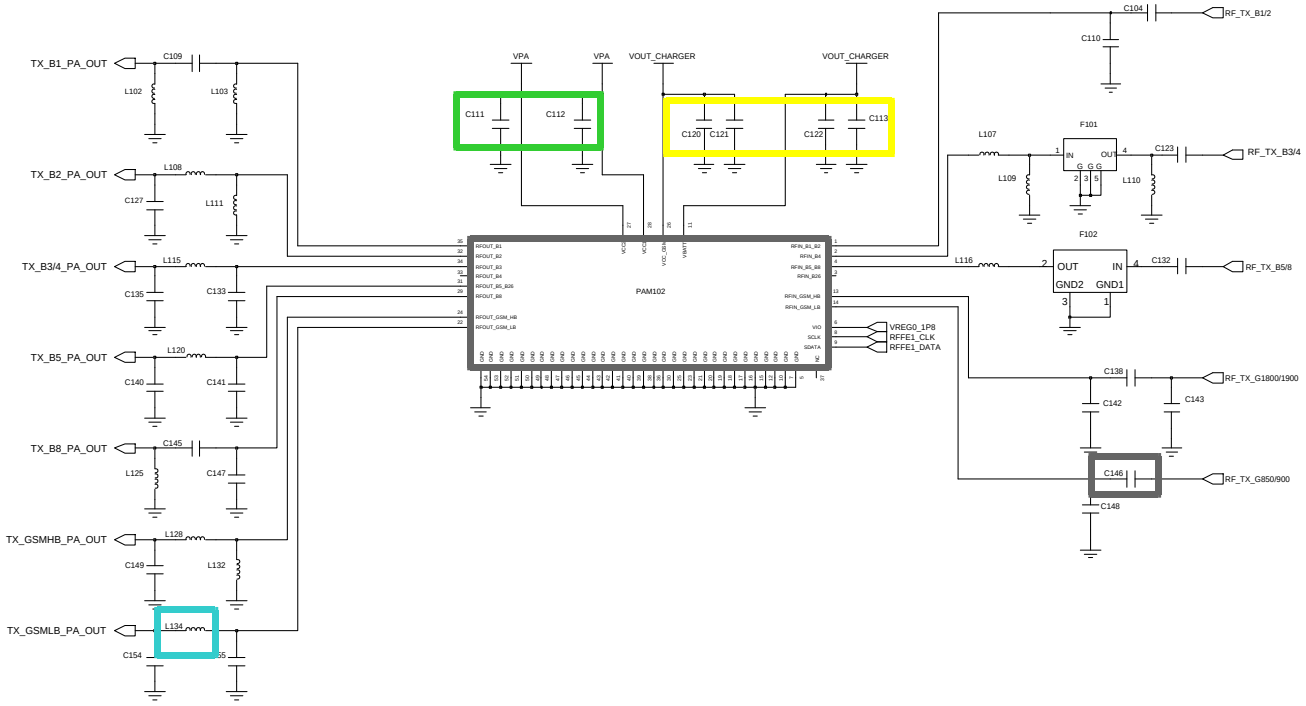

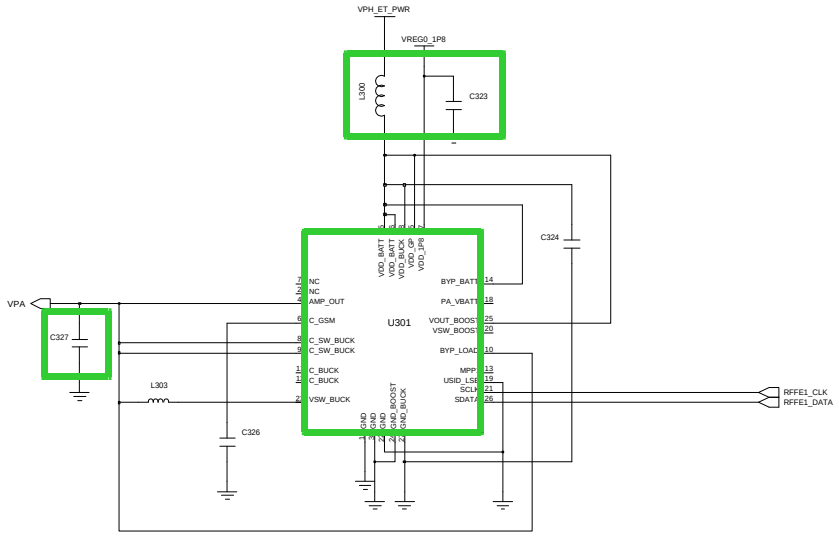

Confidential and proprietary-the contents in this service guide subject to change without prior notice.
Distribution, transmission, or infringement of any content or data from this document without Samsung's written authorization is strictly prohibited.

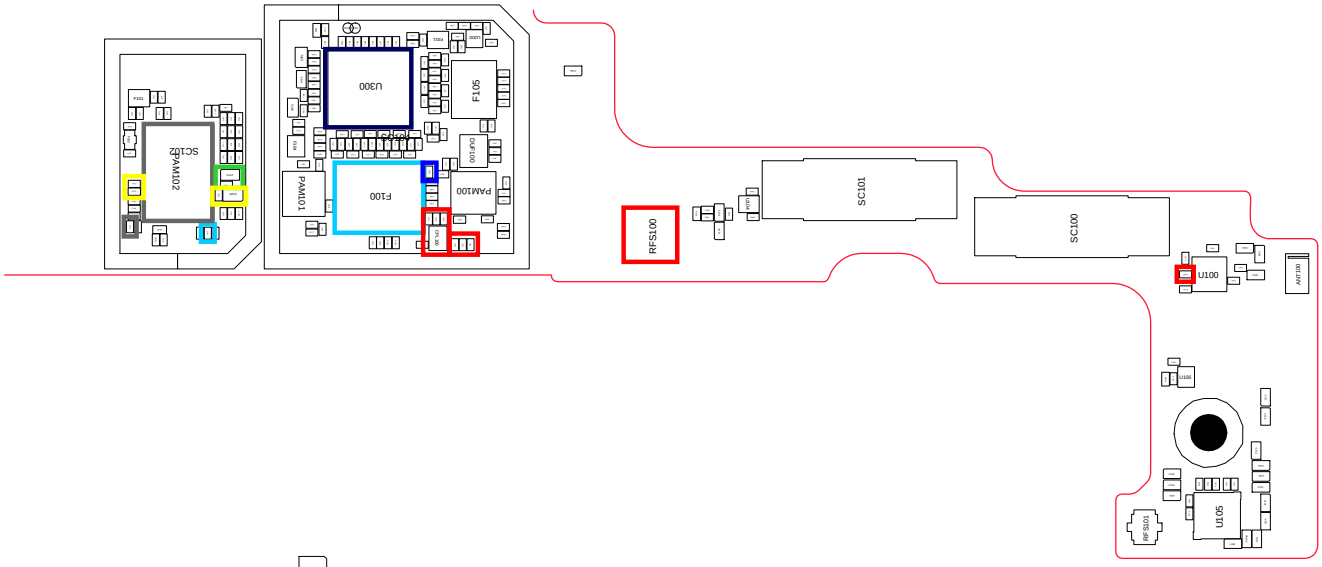

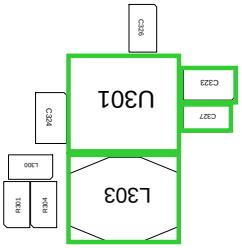

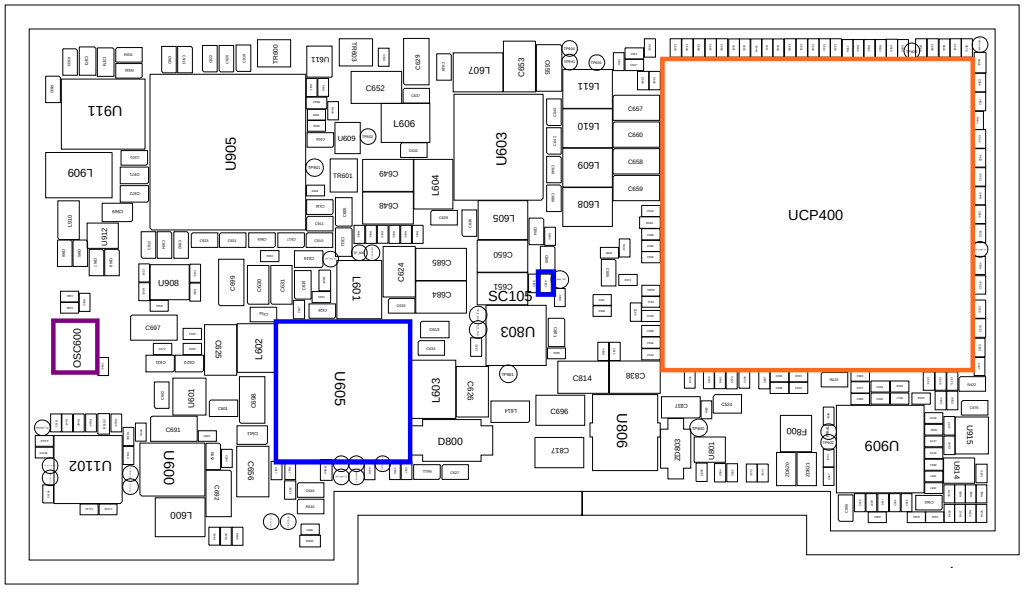

Confidential and proprietary-the contents in this service guide subject to change without prior notice.
Distribution, transmission, or infringement of any content or data from this document without Samsung's written authorization is strictly prohibited.

8-3-27. DCS/ PCS TX

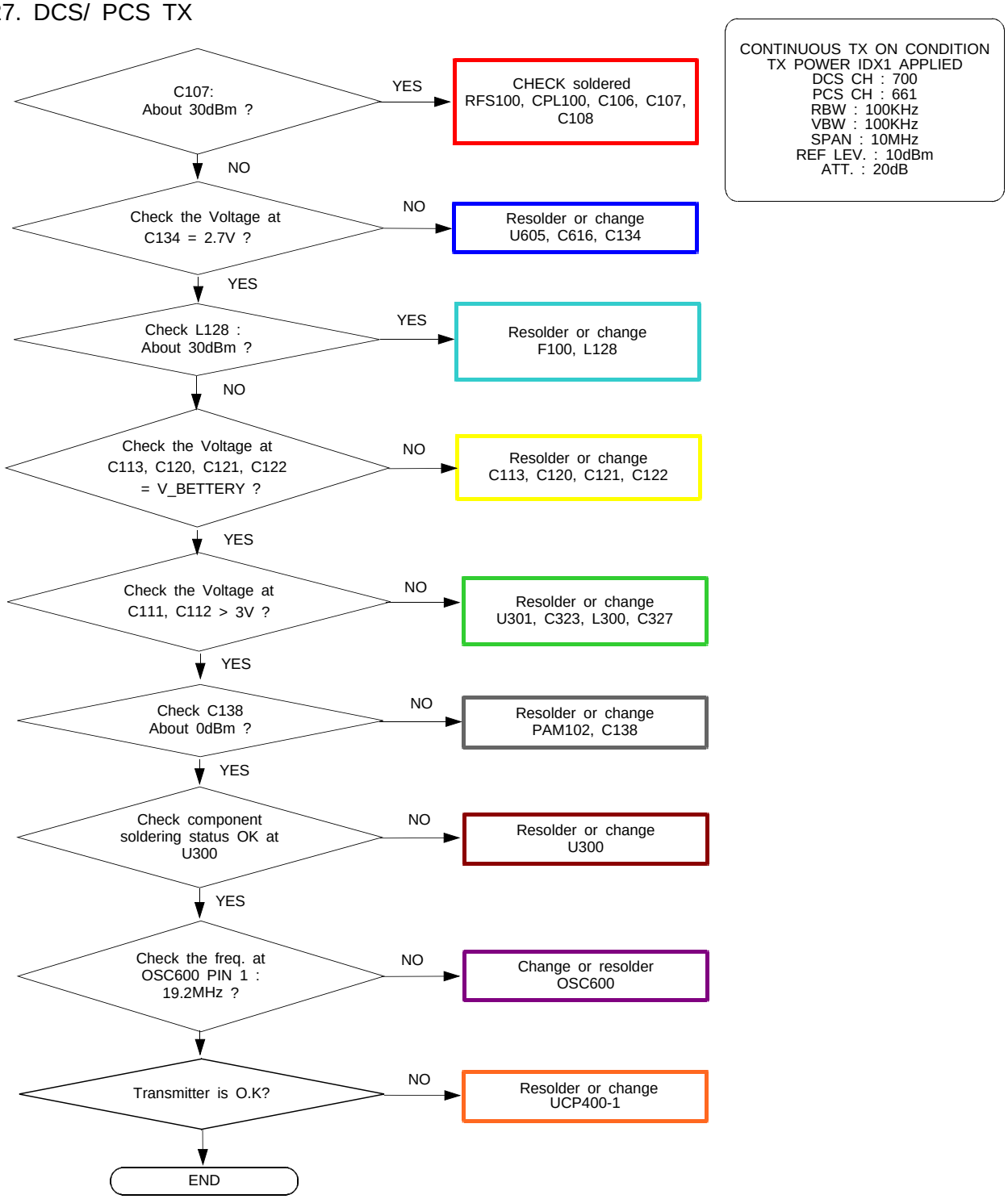

Confidential and proprietary-the contents in this service guide subject to change without prior notice.
Distribution, transmission, or infringement of any content or data from this document without Samsung's written authorization is strictly prohibited.

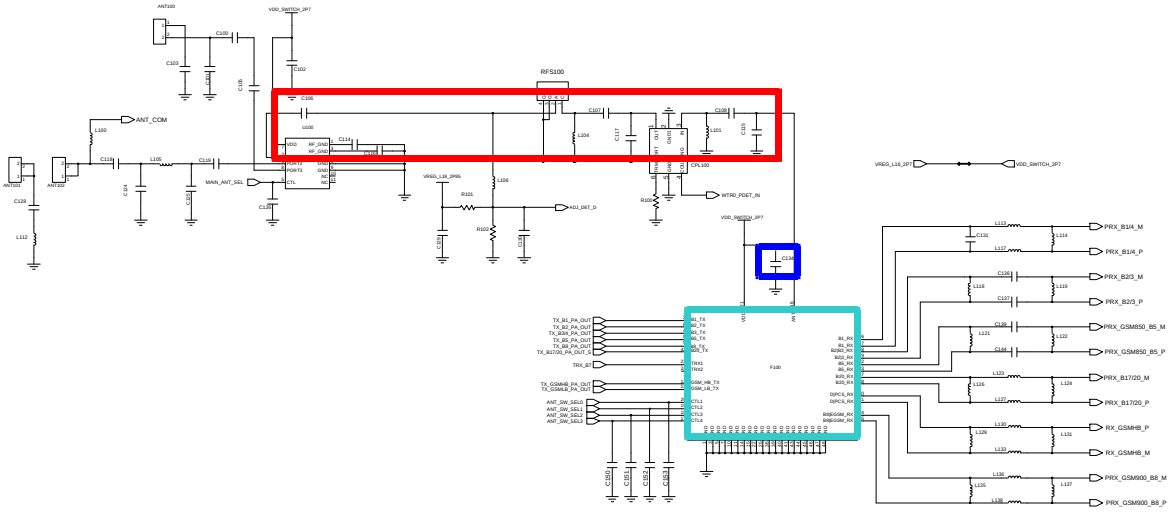

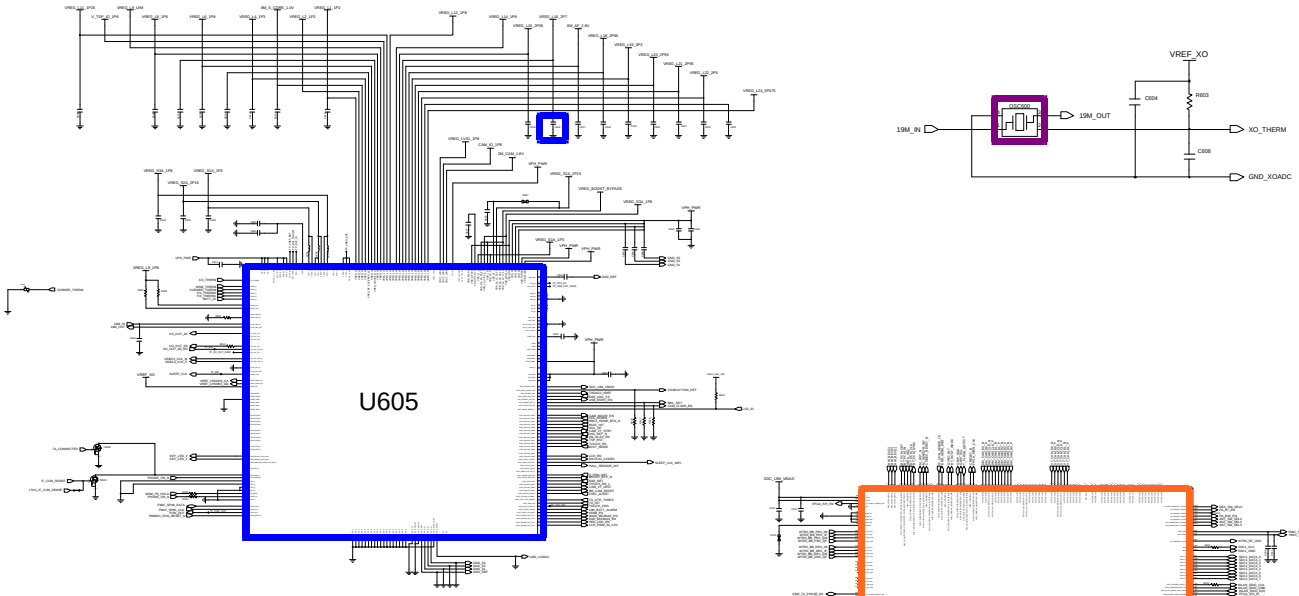

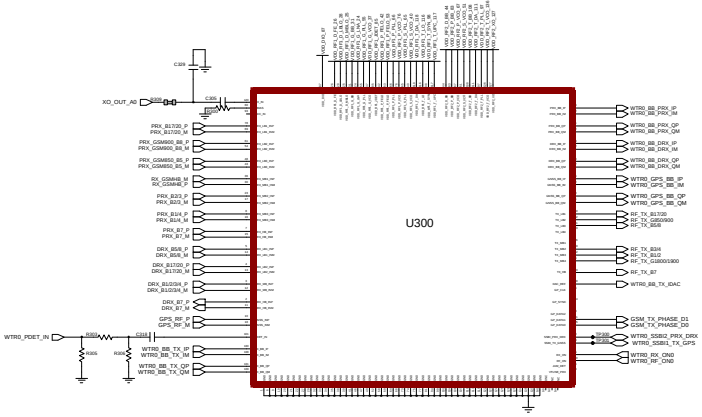

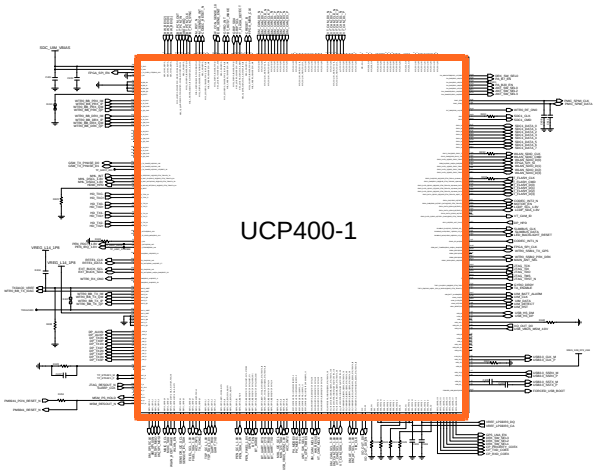

Confidential and proprietary-the contents in this service guide subject to change without prior notice.
Distribution, transmission, or infringement of any content or data from this document without Samsung's written authorization is strictly prohibited.

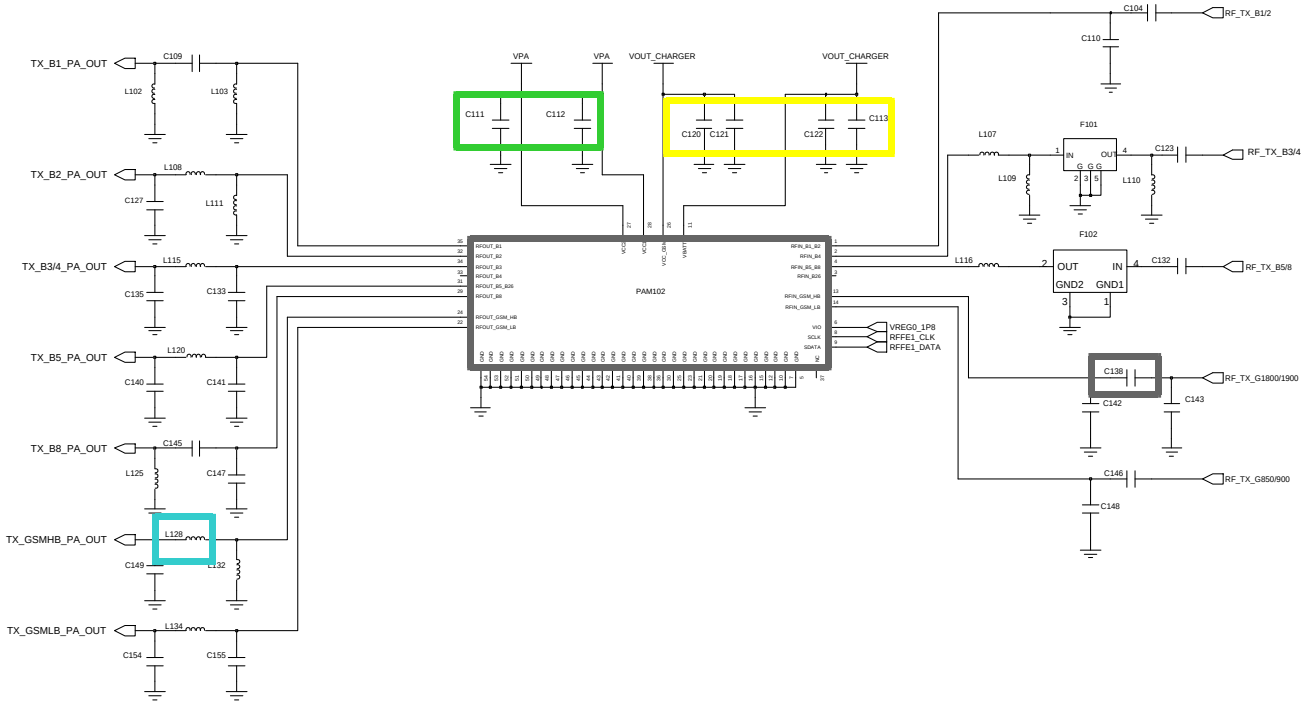

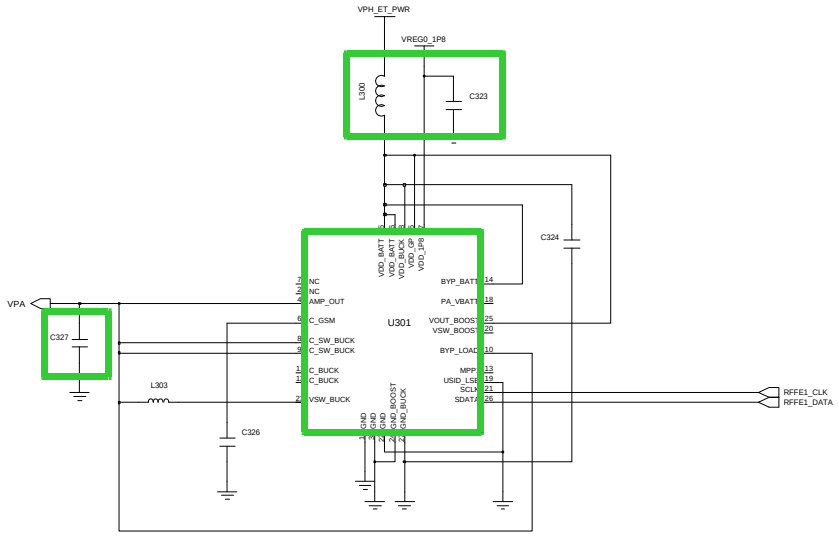

Confidential and proprietary-the contents in this service guide subject to change without prior notice.
Distribution, transmission, or infringement of any content or data from this document without Samsung's written authorization is strictly prohibited.

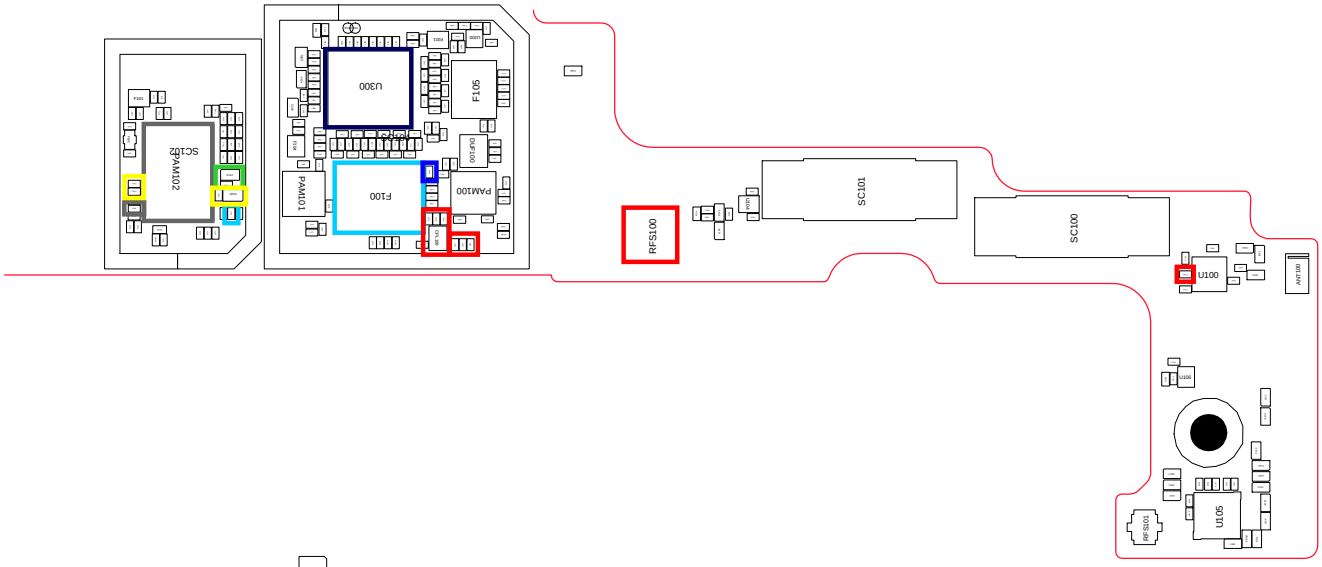
U105
RF S101
U100
ANT100
SC100
SC101
RFS100
U101
U102
U103
U104
U106
U107
U108
U109
U110
U111
U112
U113
U114
U115
U116
U117
U118
U119
U120
U121
U122
U123
U124
U125
U126
U127
U128
U129
U130
U131
U132
U133
U134
U135
U136
U137
U138
U139
U140
U141
U142
U143
U144
U145

8-3-28. LTE Band1/ WCDMA Band1 TX

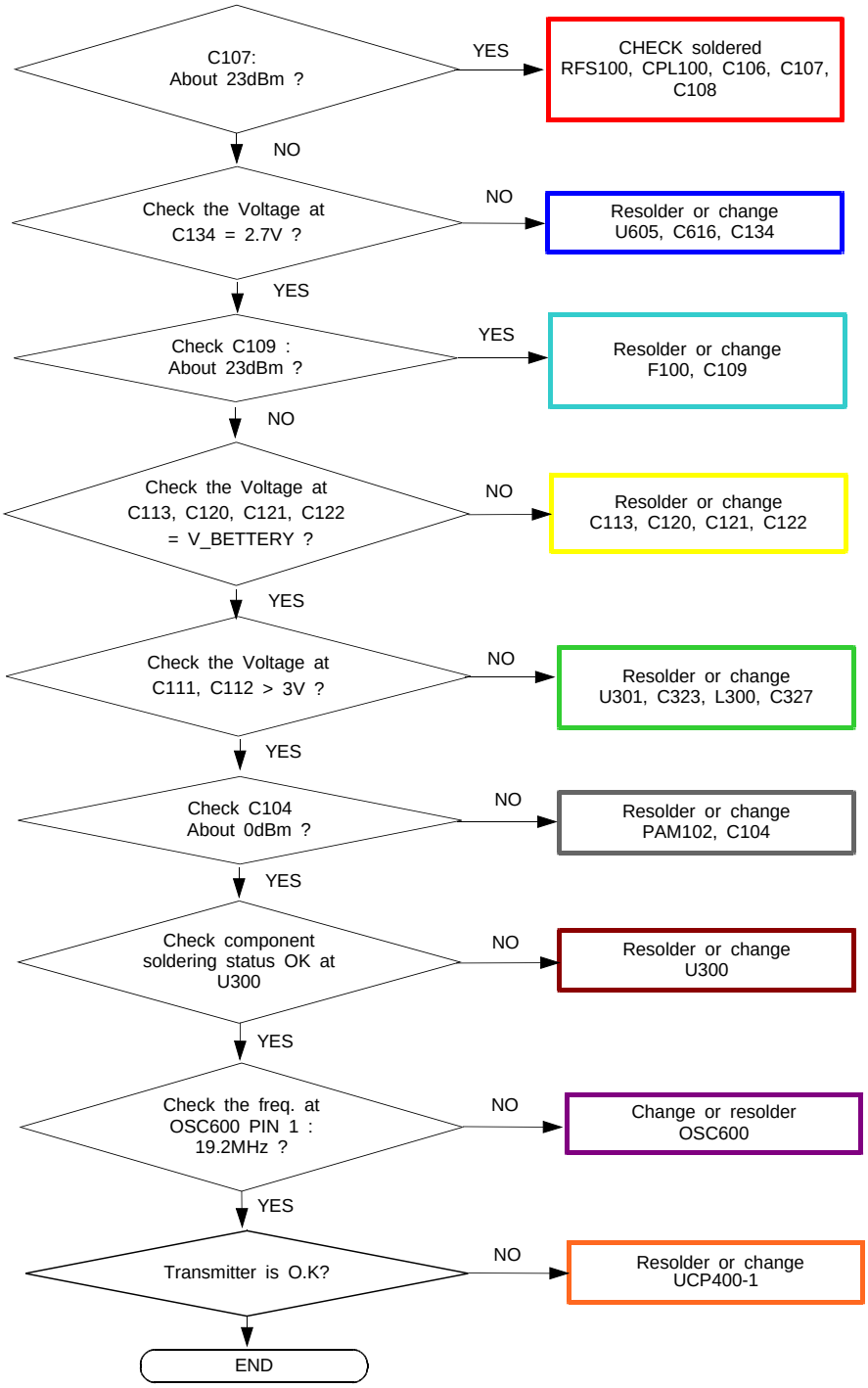

CONTINUOUS TX ON CONDITION
TX POWER IDX1 APPLIED
LTE B1 CH : 18300
WCDMA B1 CH : 9750
RBW : 100KHz
VBW : 100KHz
SPAN : 10MHz
REF LEV. : 10dBm
ATT. : 20dB

Confidential and proprietary-the contents in this service guide subject to change without prior notice.
Distribution, transmission, or infringement of any content or data from this document without Samsung's written authorization is strictly prohibited.

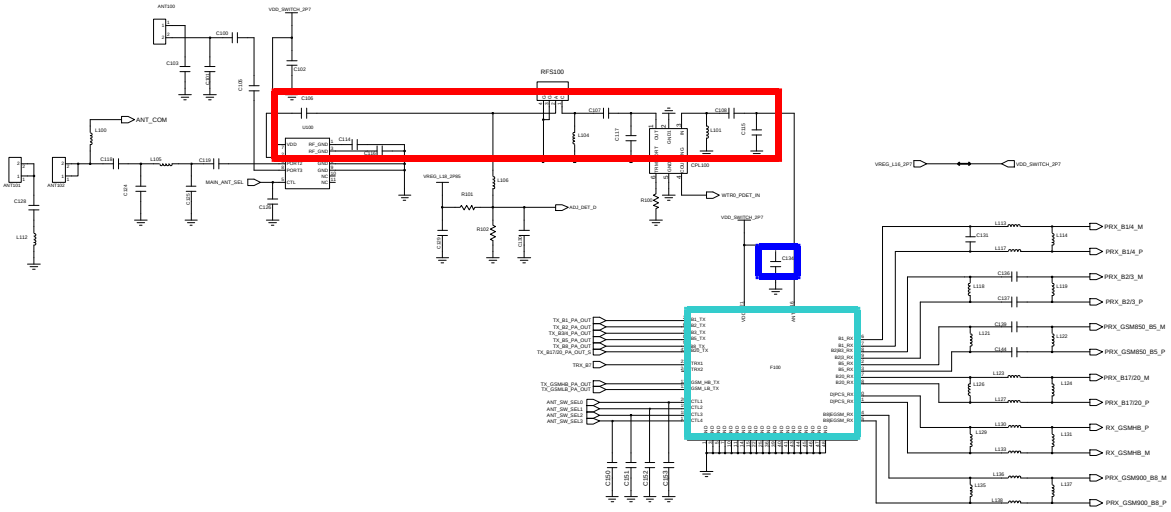

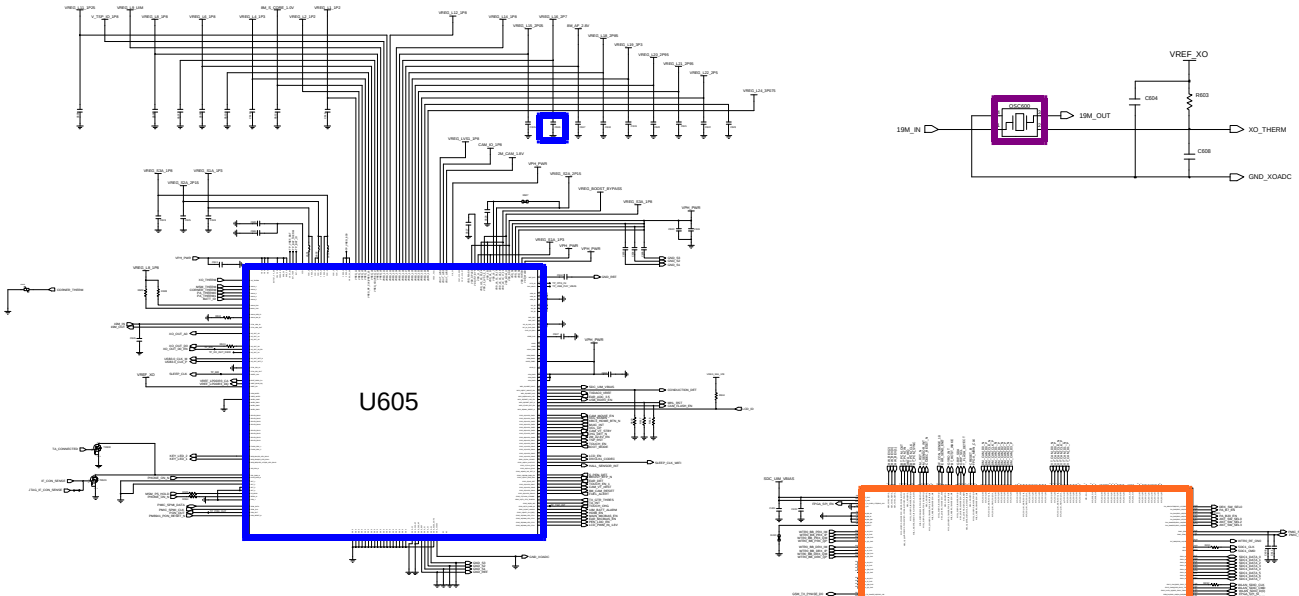

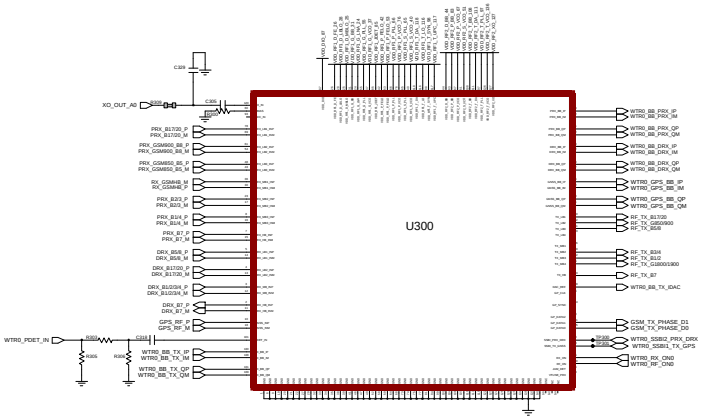

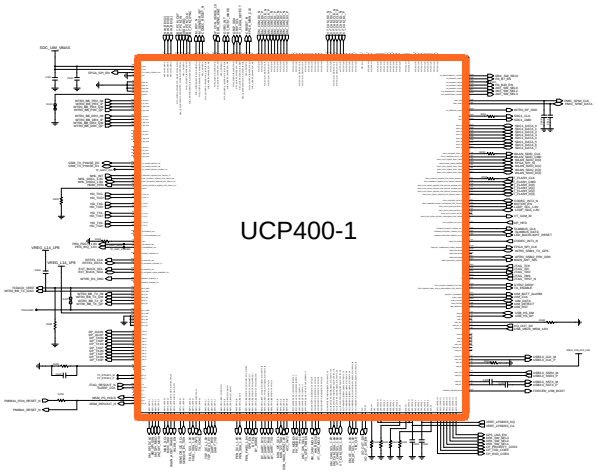

Confidential and proprietary-the contents in this service guide subject to change without prior notice.
Distribution, transmission, or infringement of any content or data from this document without Samsung's written authorization is strictly prohibited.

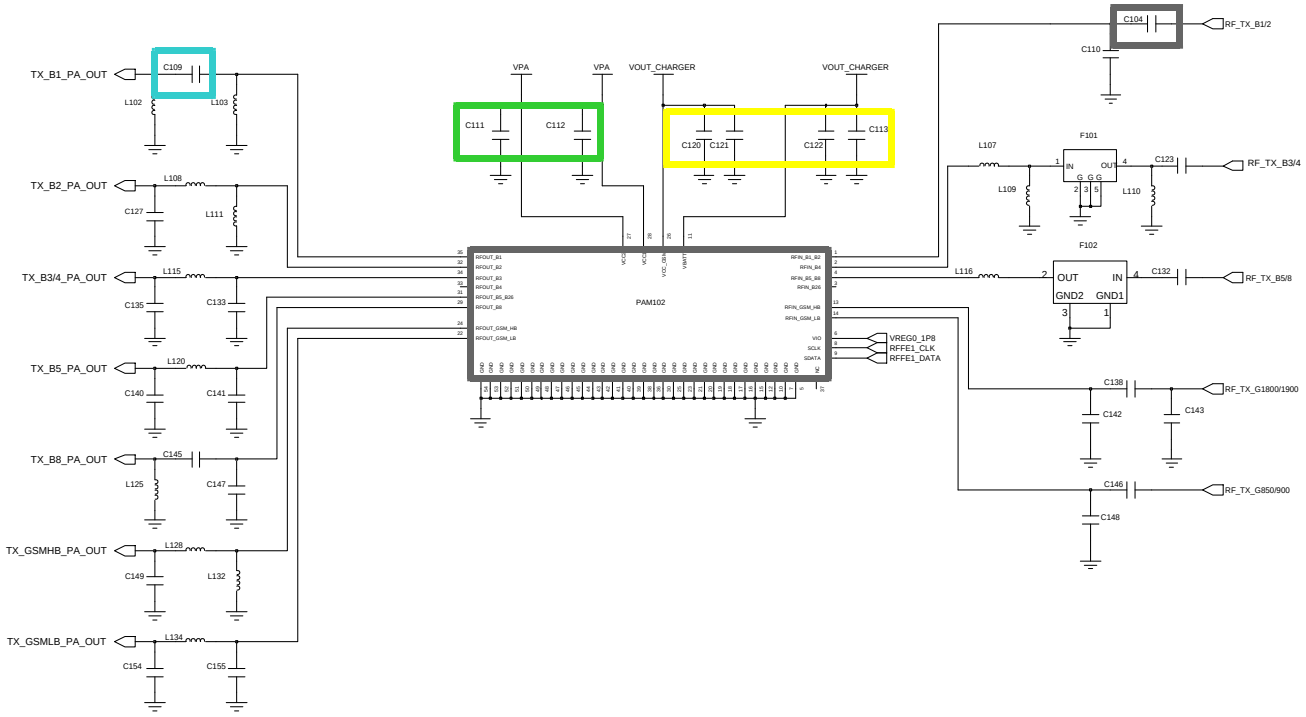

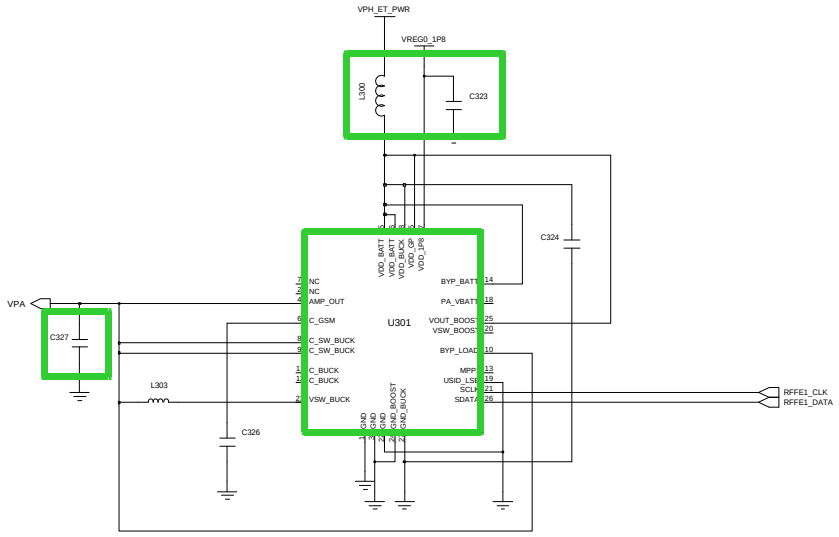

Confidential and proprietary-the contents in this service guide subject to change without prior notice.
Distribution, transmission, or infringement of any content or data from this document without Samsung's written authorization is strictly prohibited.

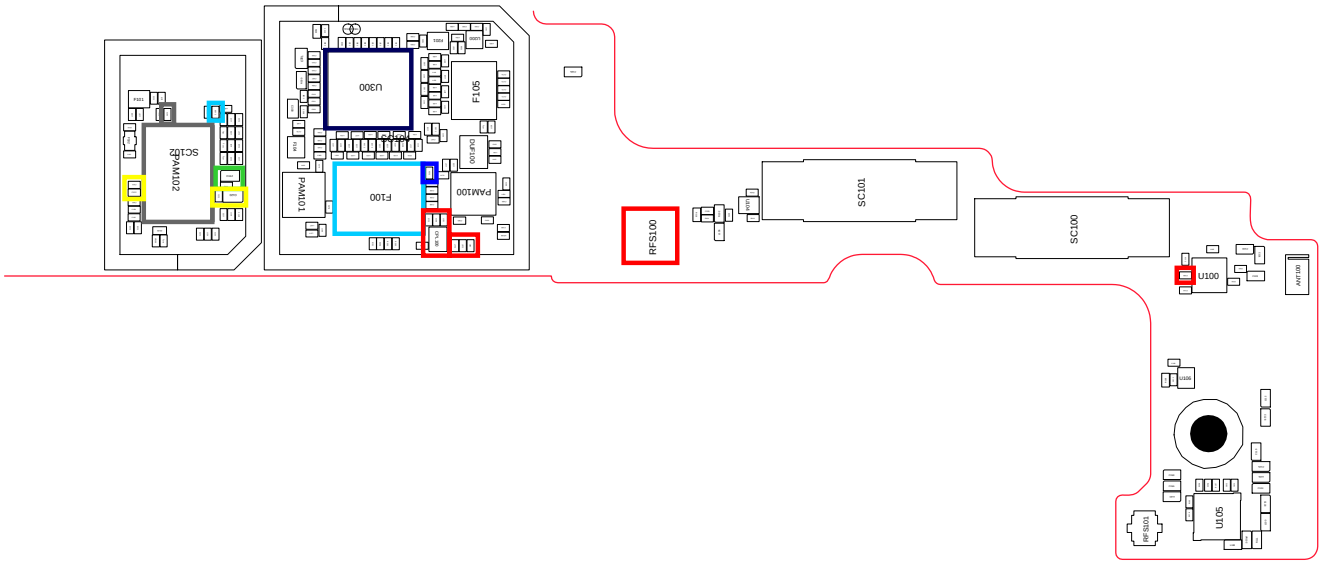

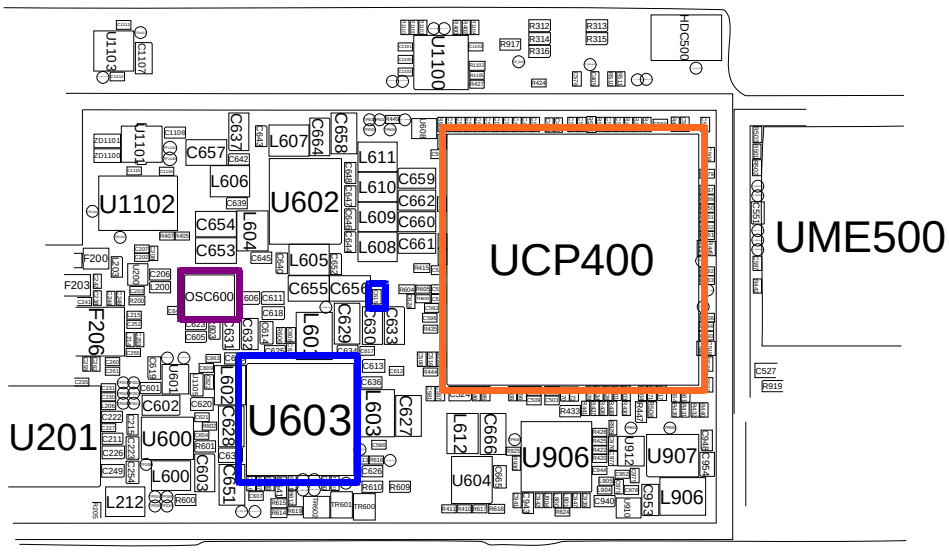

Confidential and proprietary-the contents in this service guide subject to change without prior notice.
Distribution, transmission, or infringement of any content or data from this document without Samsung's written authorization is strictly prohibited.

8-3-29. WCDMA Band2 TX

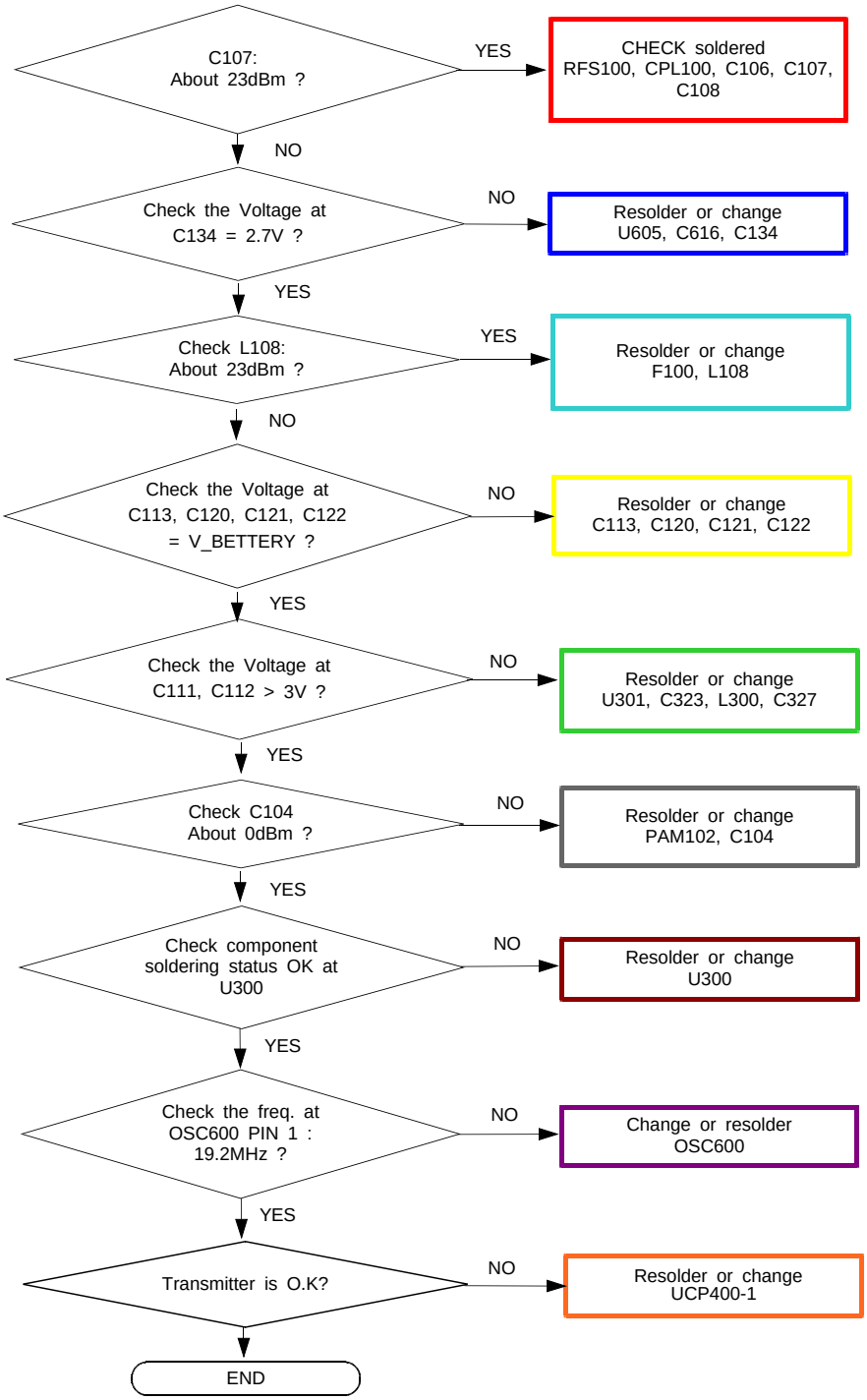

CONTINUOUS TX ON CONDITION
TX POWER IDX1 APPLIED
WCDMA B2 CH : 9400
RBW : 100KHz
VBW : 100KHz
SPAN : 10MHz
REF LEV. : 10dBm
ATT. : 20dB

Confidential and proprietary-the contents in this service guide subject to change without prior notice.
Distribution, transmission, or infringement of any content or data from this document without Samsung's written authorization is strictly prohibited.

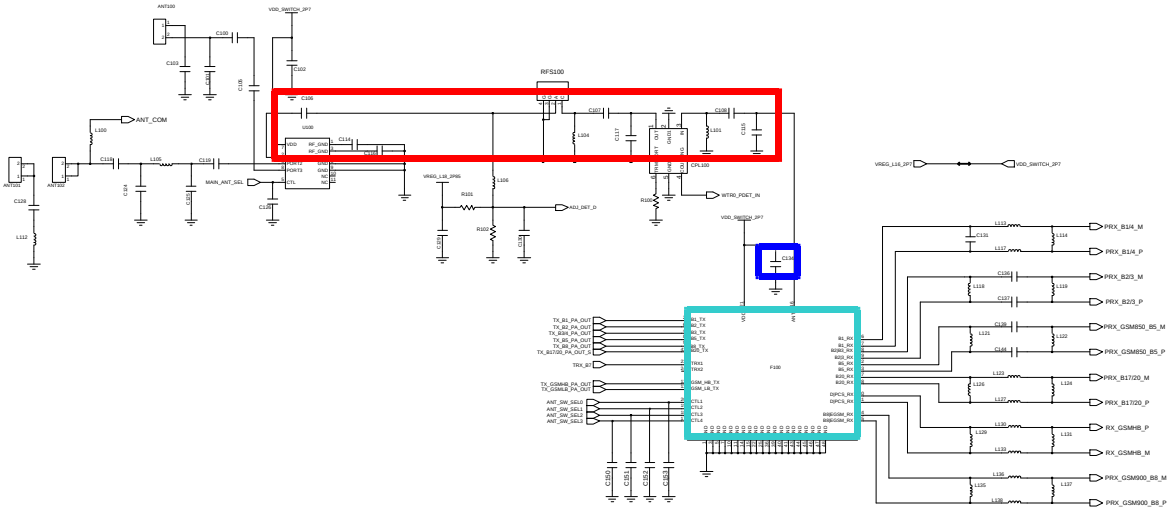

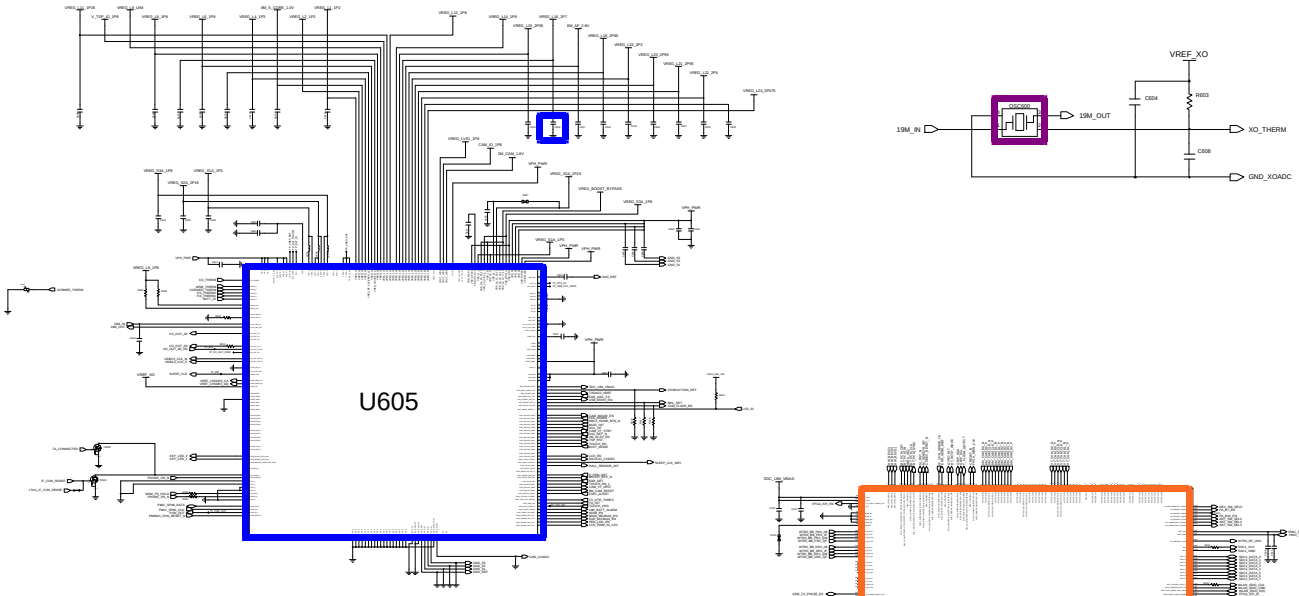

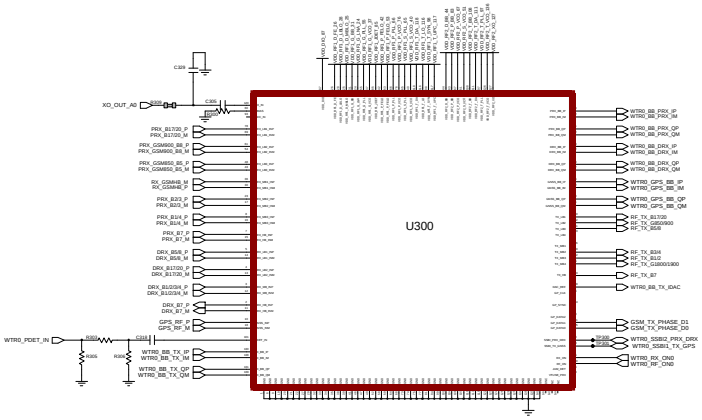

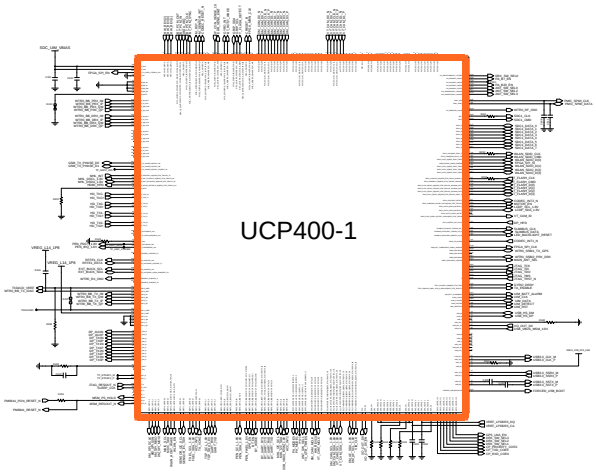

Confidential and proprietary-the contents in this service guide subject to change without prior notice.
Distribution, transmission, or infringement of any content or data from this document without Samsung's written authorization is strictly prohibited.

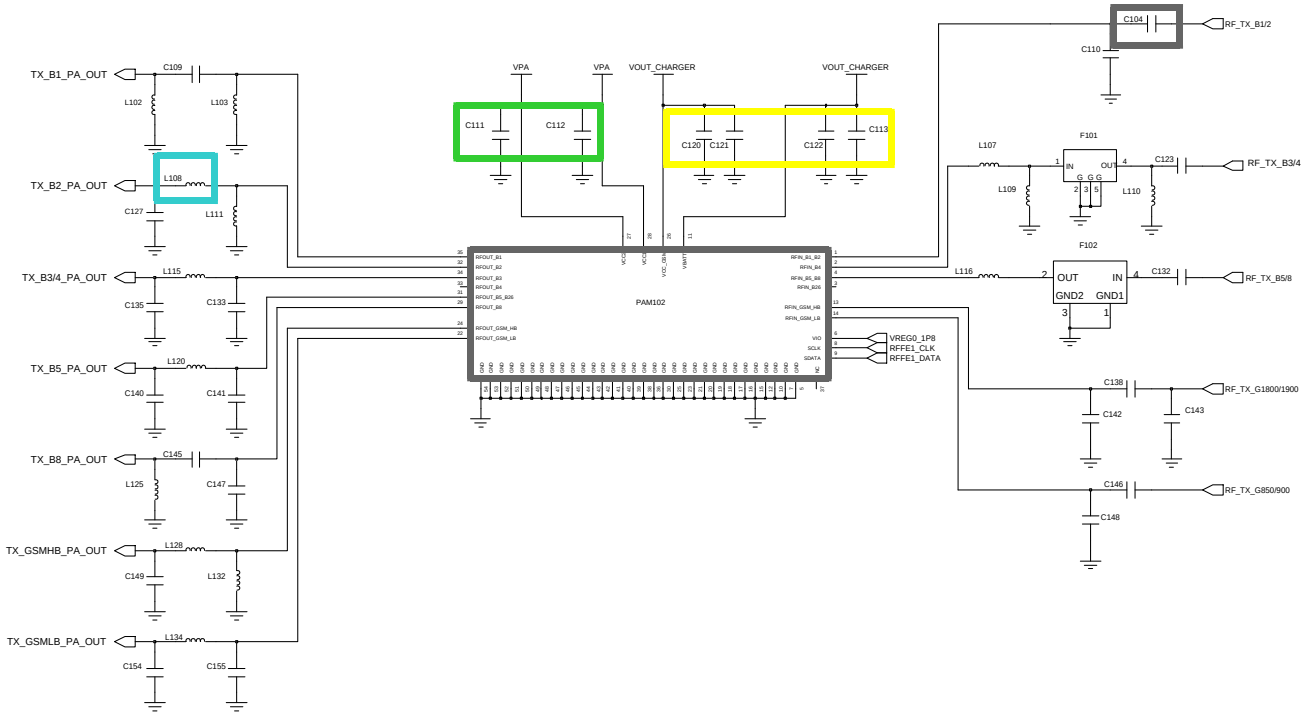

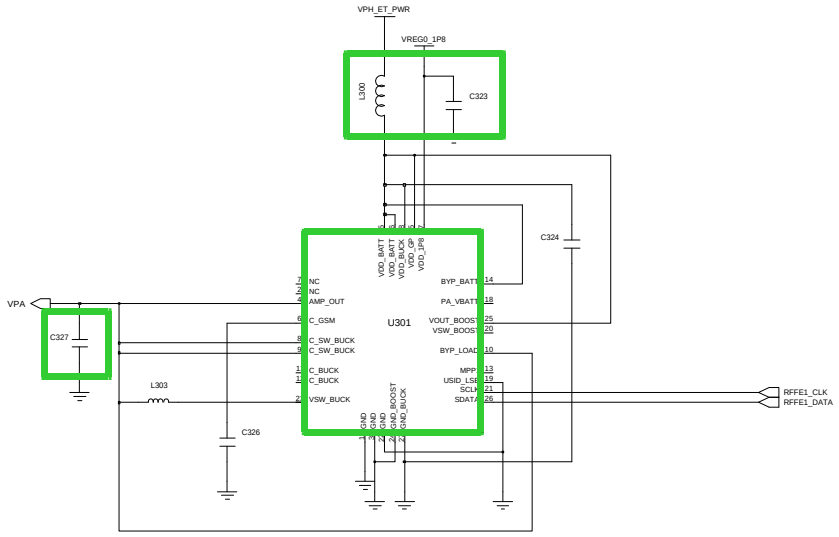

Confidential and proprietary-the contents in this service guide subject to change without prior notice.
Distribution, transmission, or infringement of any content or data from this document without Samsung's written authorization is strictly prohibited.

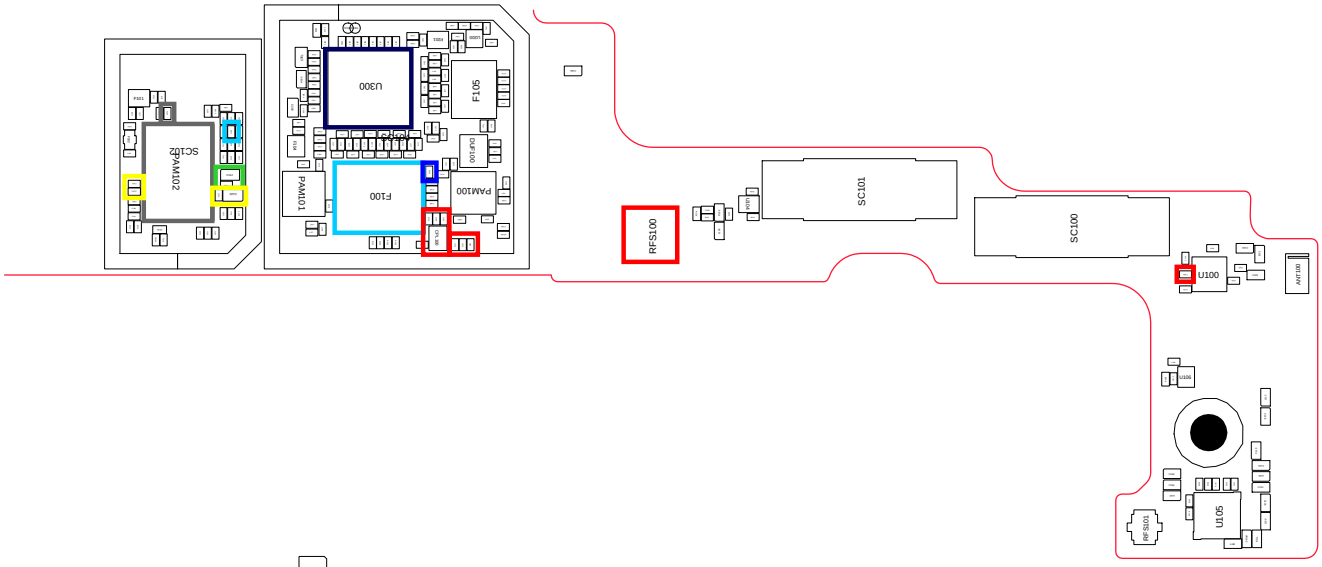

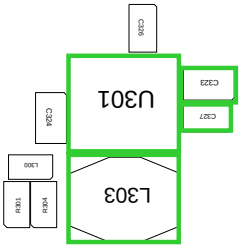

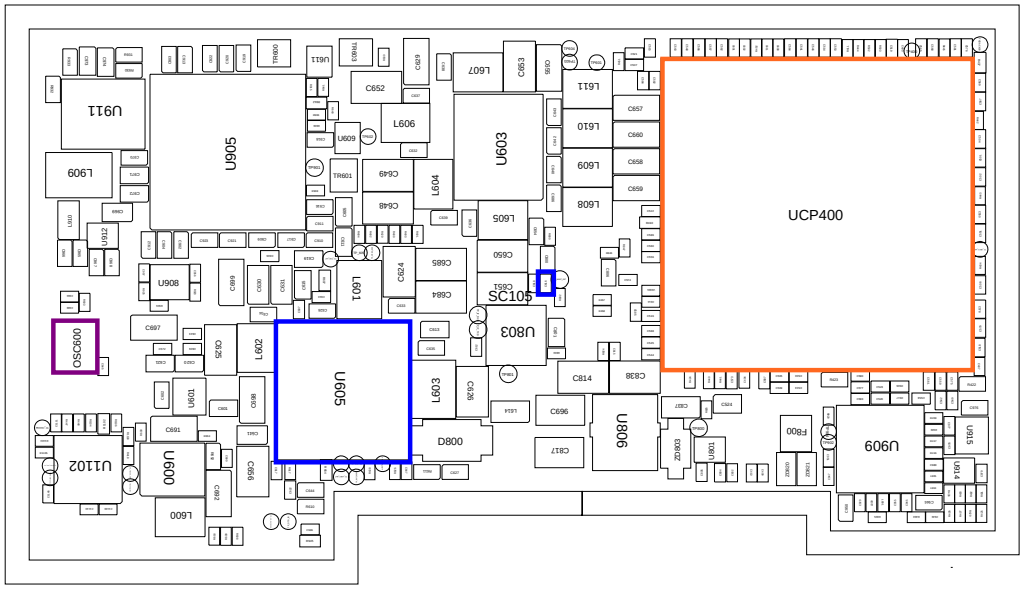

Confidential and proprietary-the contents in this service guide subject to change without prior notice.
Distribution, transmission, or infringement of any content or data from this document without Samsung's written authorization is strictly prohibited.

8-3-30. LTE Band3 TX

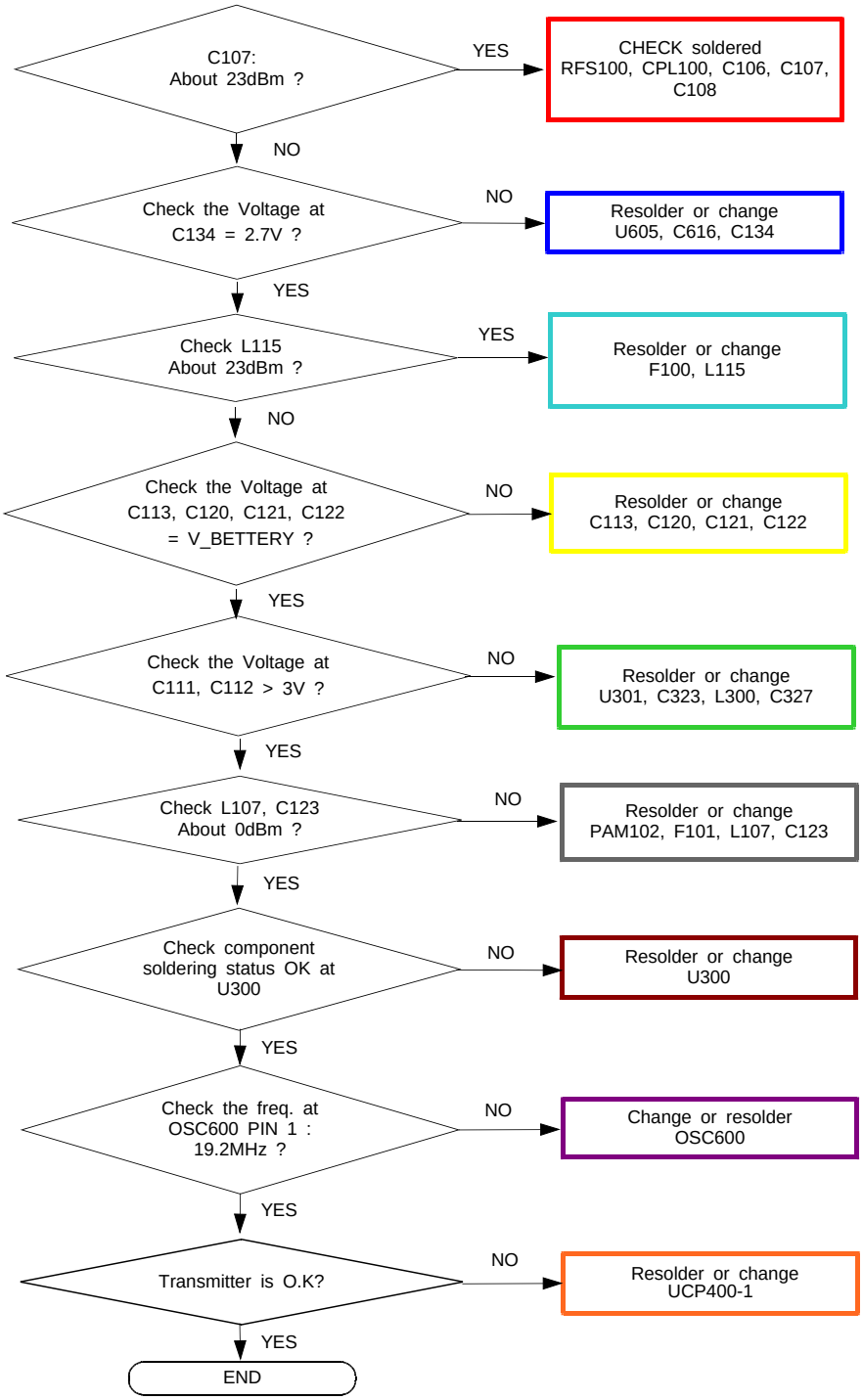

CONTINUOUS TX ON CONDITION
TX POWER IDX1 APPLIED
LTE B3 CH : 19575
RBW : 100KHz
VBW : 100KHz
SPAN : 10MHz
REF LEV. : 10dBm
ATT. : 20dB

Confidential and proprietary-the contents in this service guide subject to change without prior notice.
Distribution, transmission, or infringement of any content or data from this document without Samsung's written authorization is strictly prohibited.

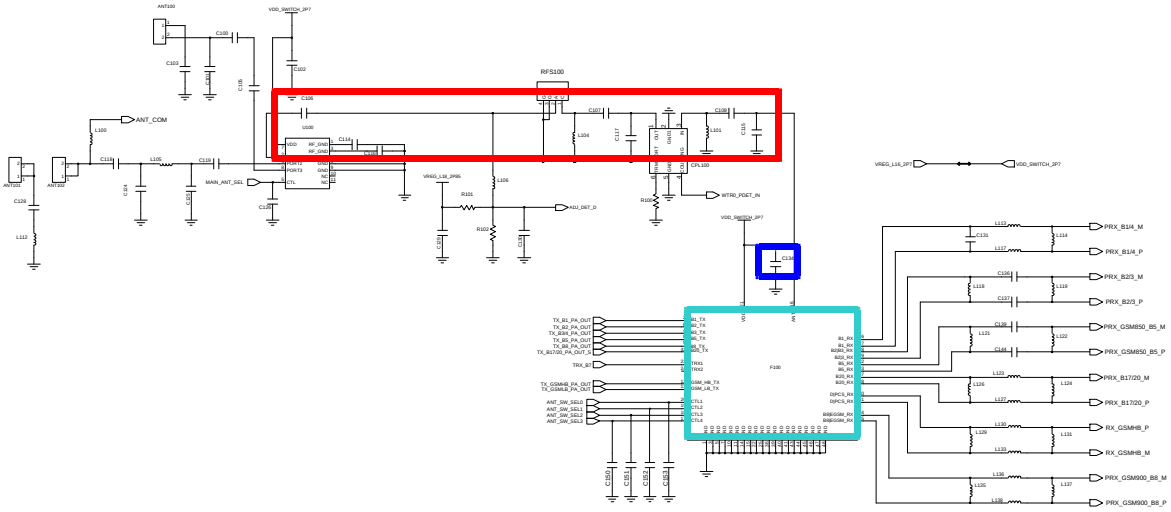

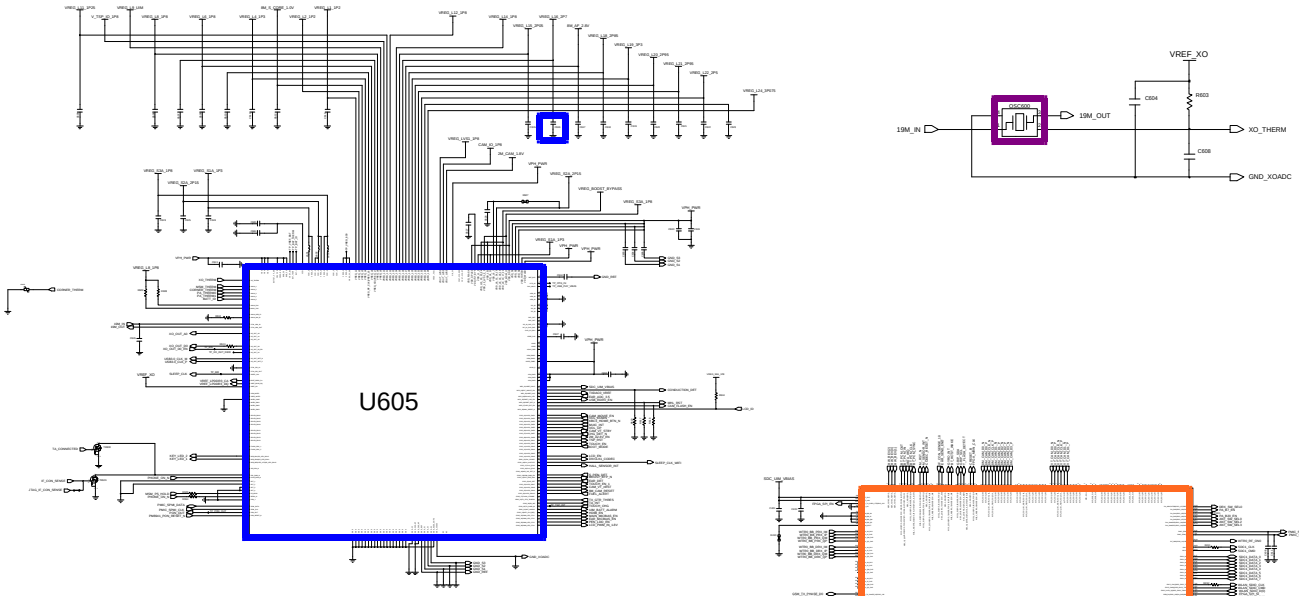

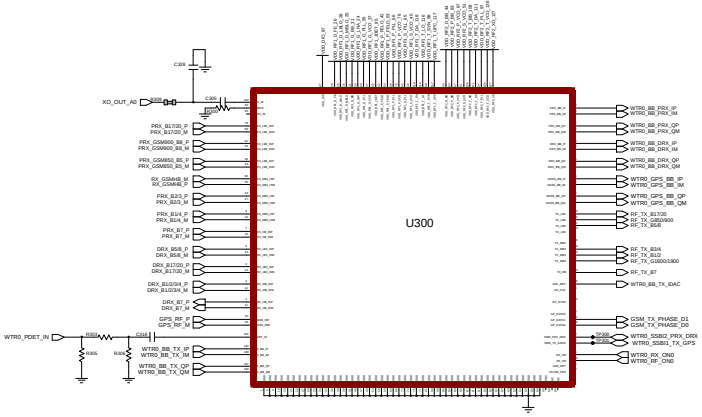

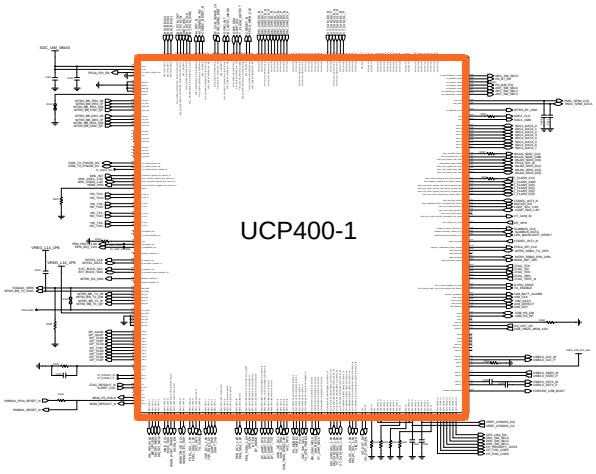

Confidential and proprietary-the contents in this service guide subject to change without prior notice.
Distribution, transmission, or infringement of any content or data from this document without Samsung's written authorization is strictly prohibited.

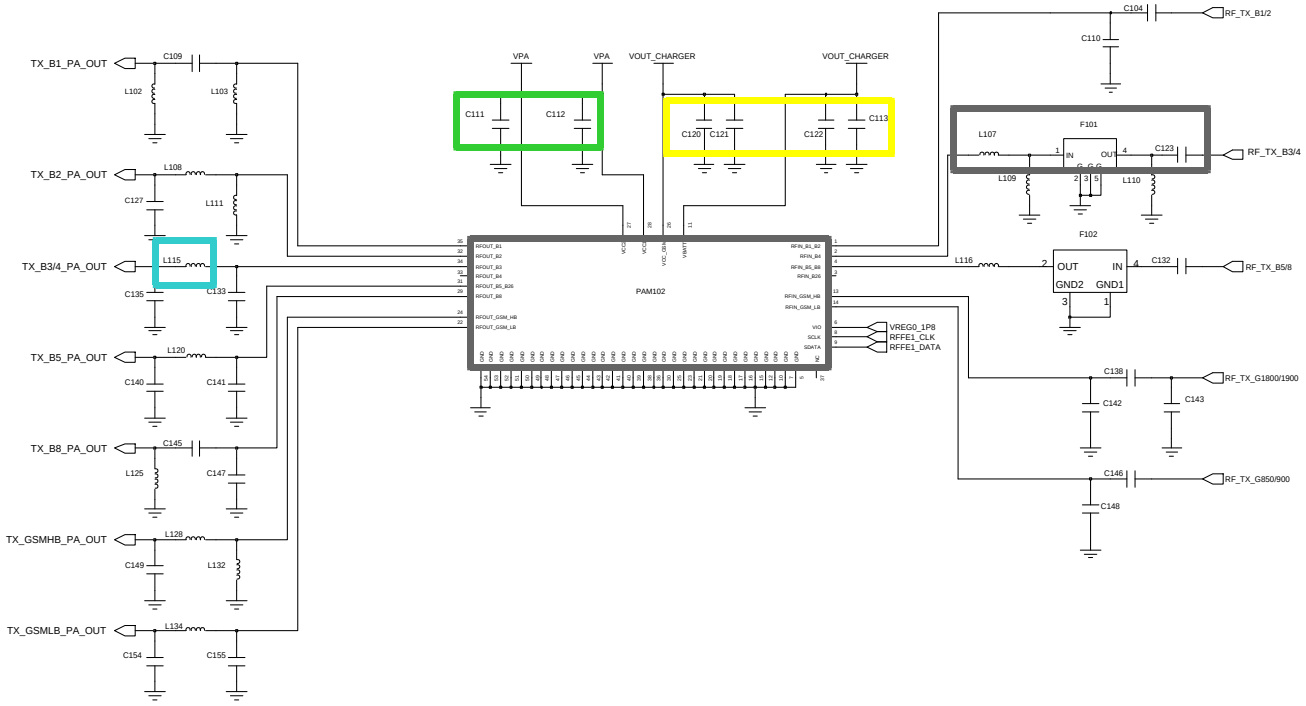

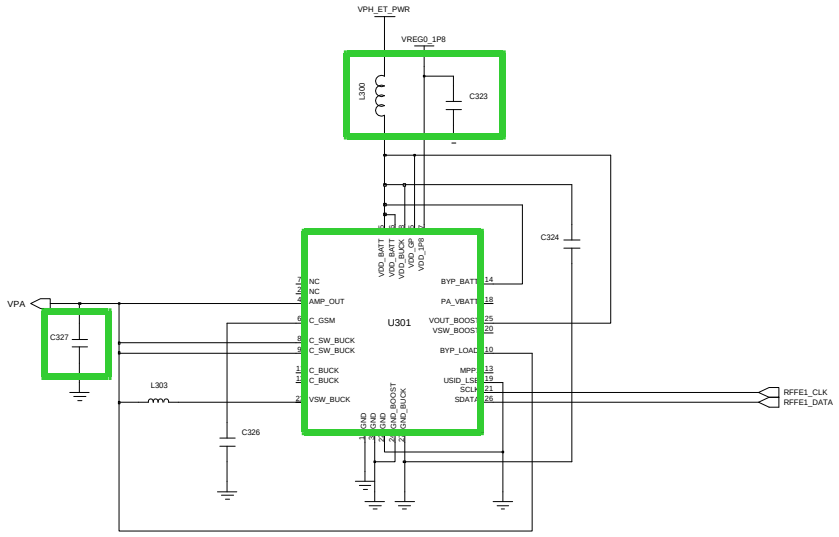

Confidential and proprietary-the contents in this service guide subject to change without prior notice.
Distribution, transmission, or infringement of any content or data from this document without Samsung's written authorization is strictly prohibited.

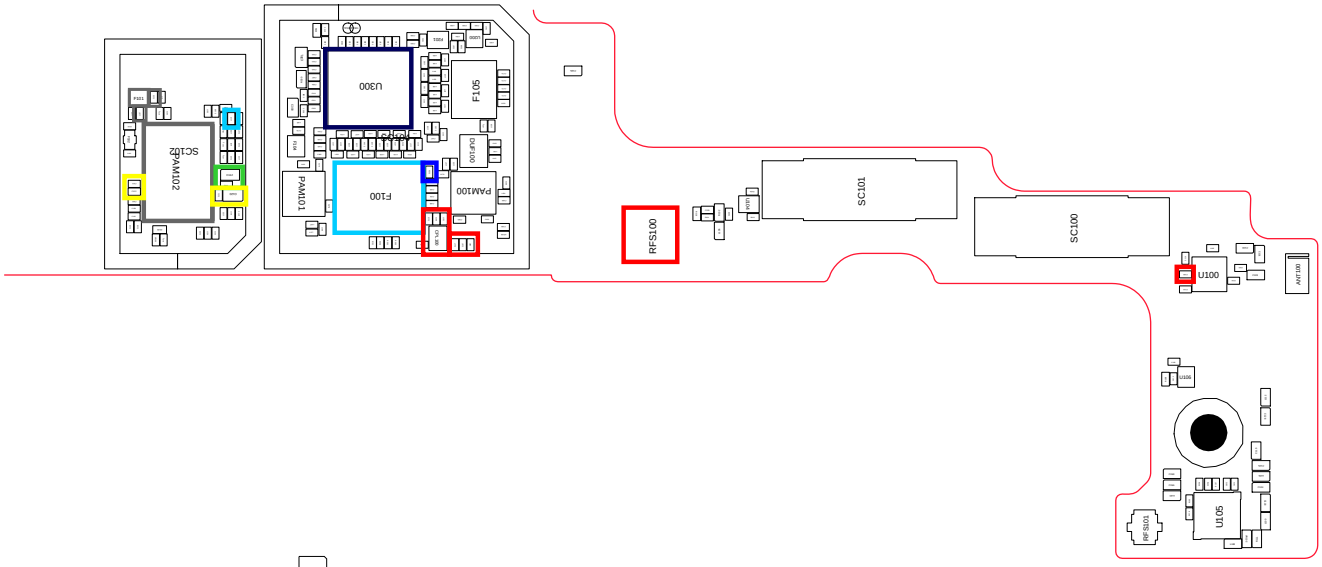

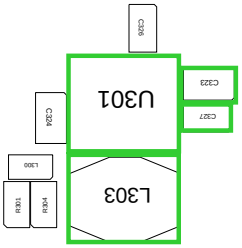

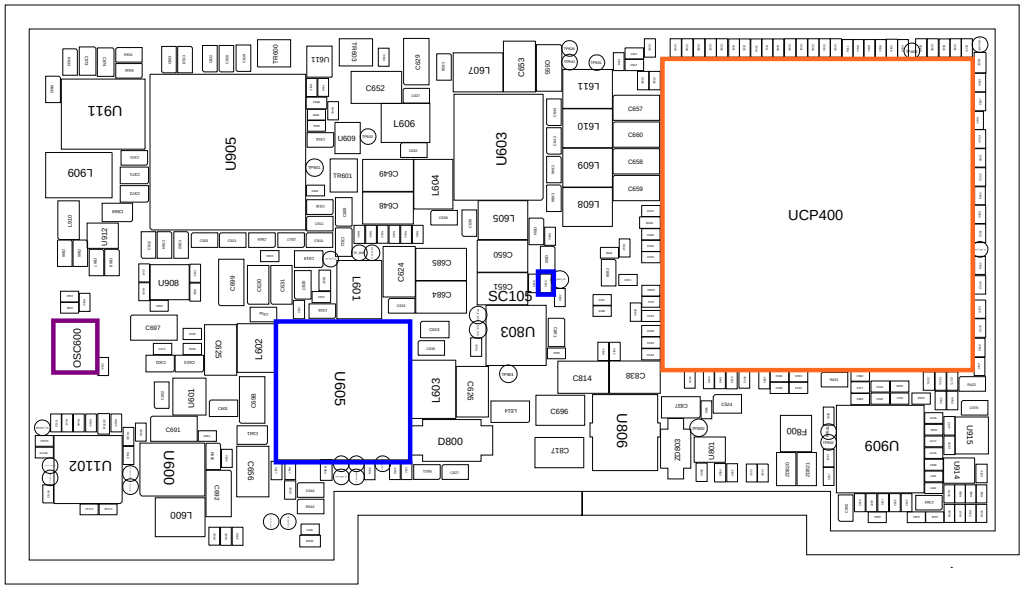

Confidential and proprietary-the contents in this service guide subject to change without prior notice.
Distribution, transmission, or infringement of any content or data from this document without Samsung's written authorization is strictly prohibited.

8-3-31. LTE Band5/ WCDMA Band5 TX

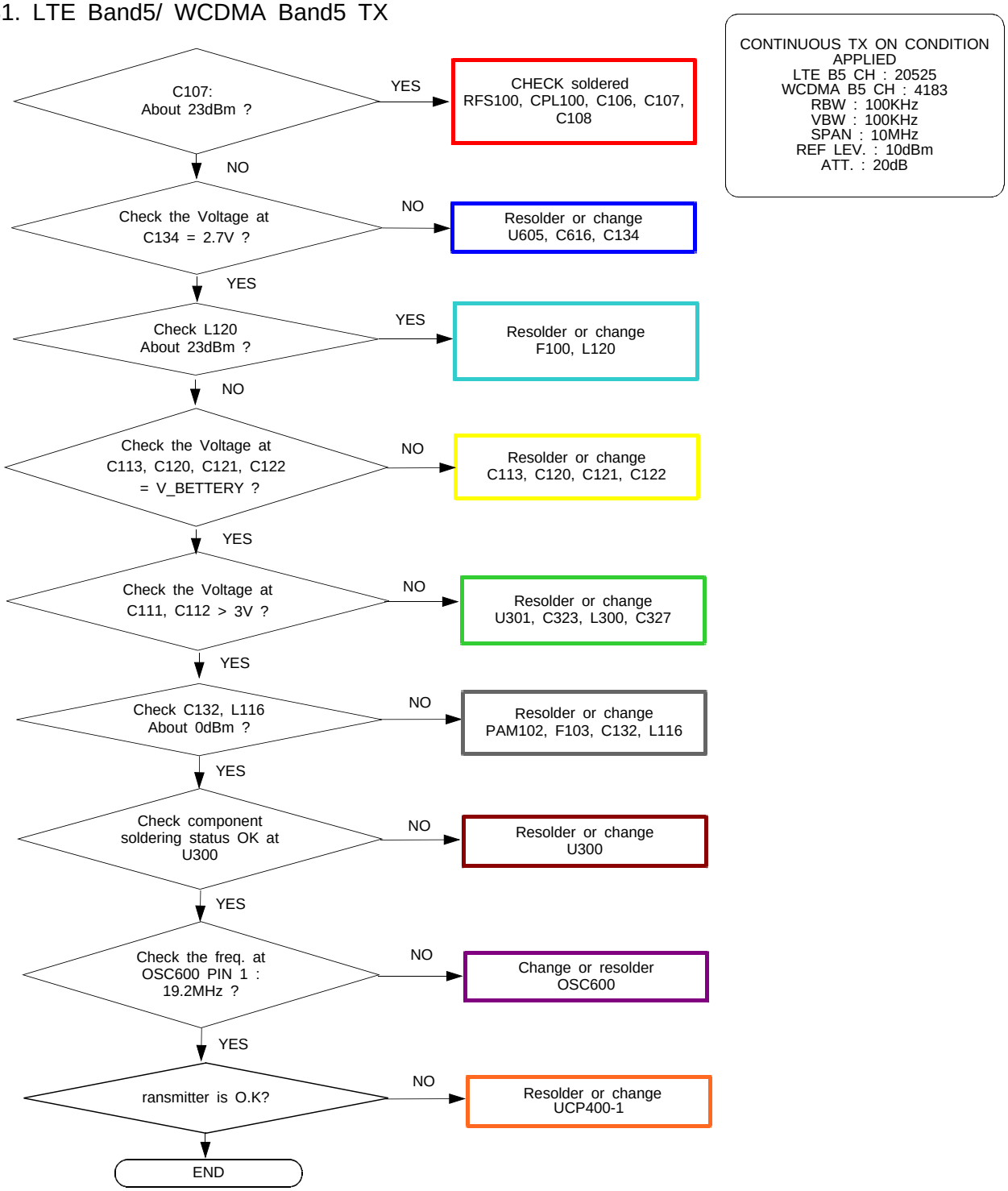

Confidential and proprietary-the contents in this service guide subject to change without prior notice.
Distribution, transmission, or infringement of any content or data from this document without Samsung's written authorization is strictly prohibited.

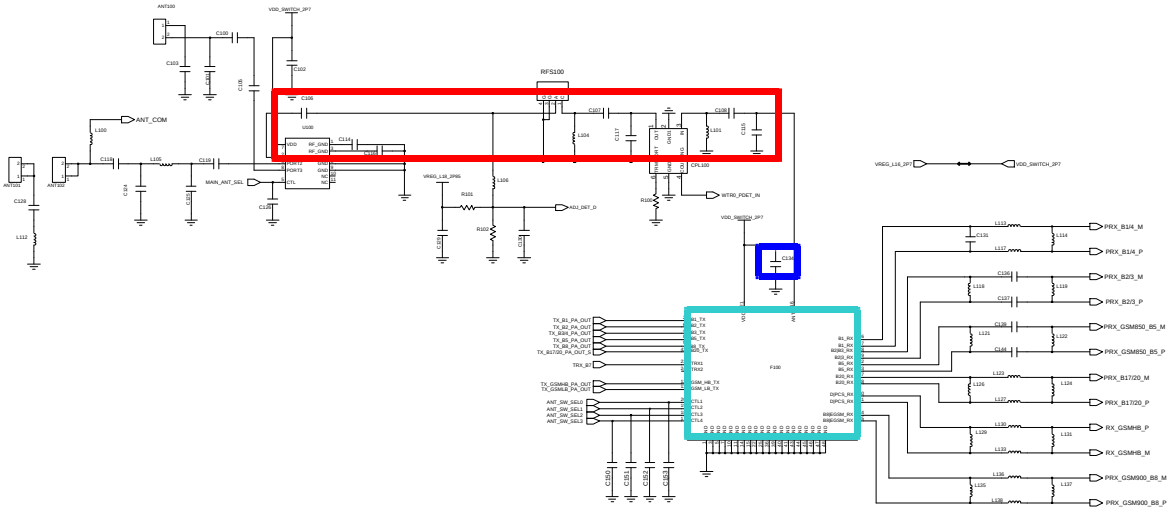

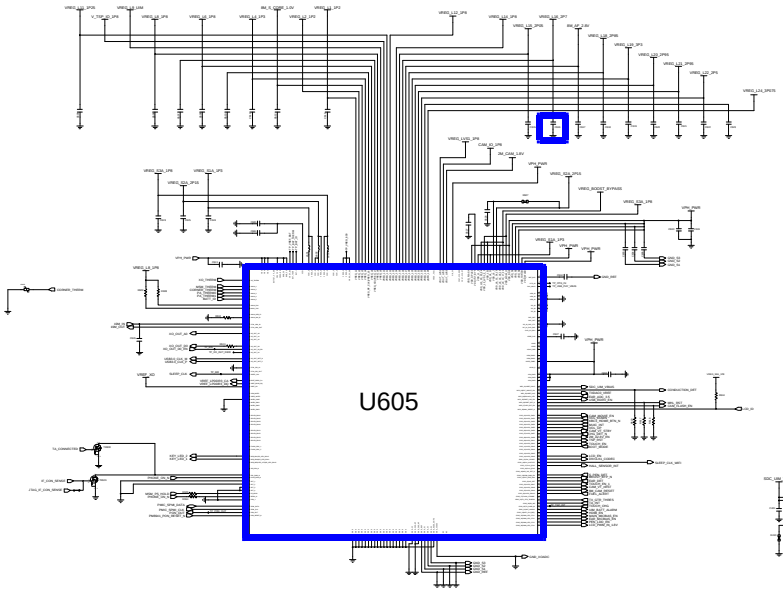

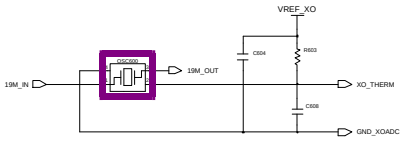

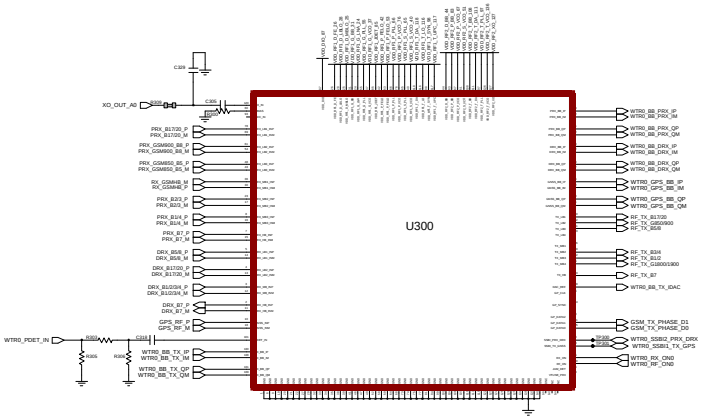

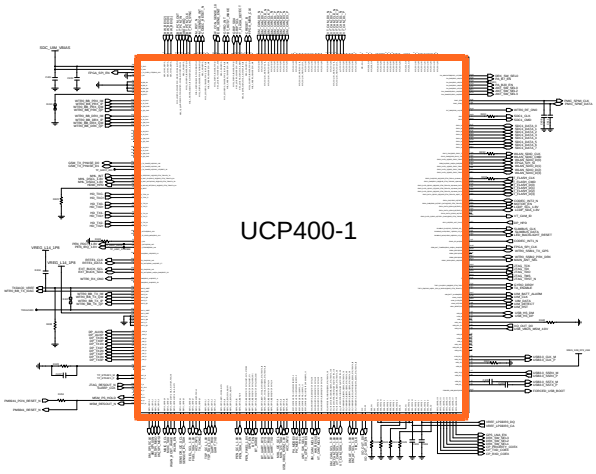

Confidential and proprietary-the contents in this service guide subject to change without prior notice.
Distribution, transmission, or infringement of any content or data from this document without Samsung's written authorization is strictly prohibited.

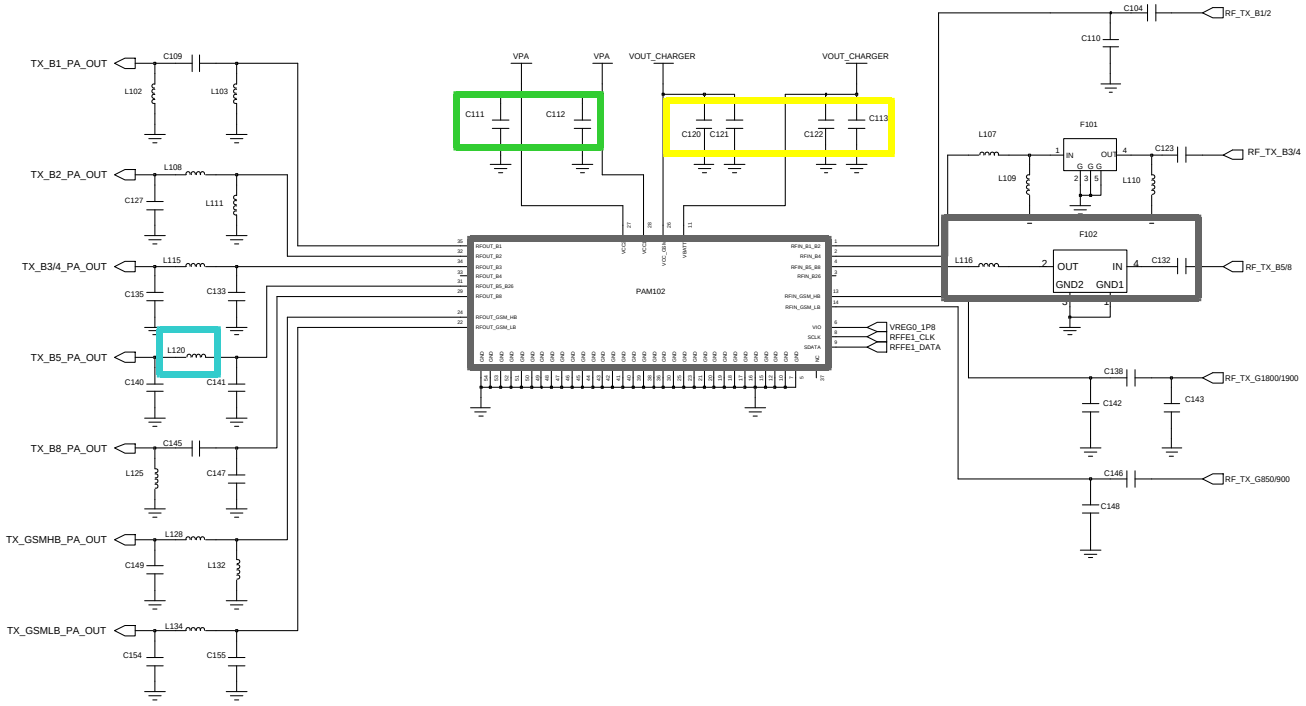

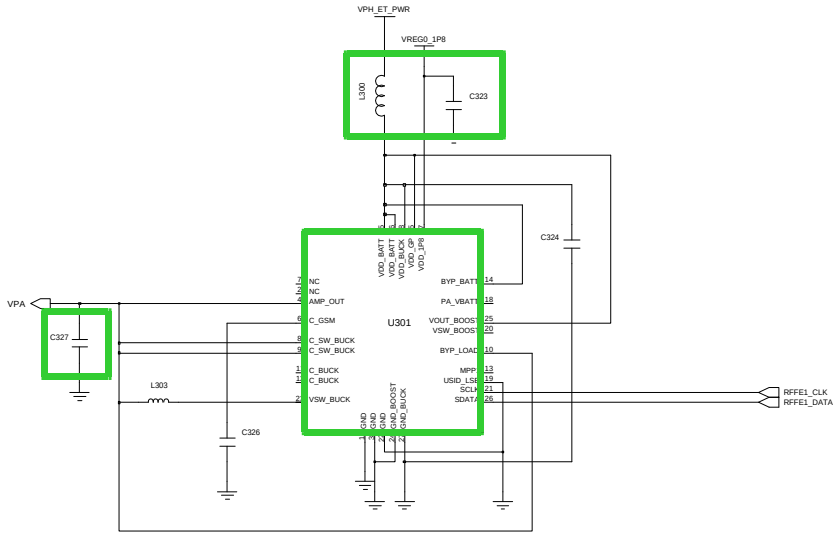

Confidential and proprietary-the contents in this service guide subject to change without prior notice.
Distribution, transmission, or infringement of any content or data from this document without Samsung's written authorization is strictly prohibited.

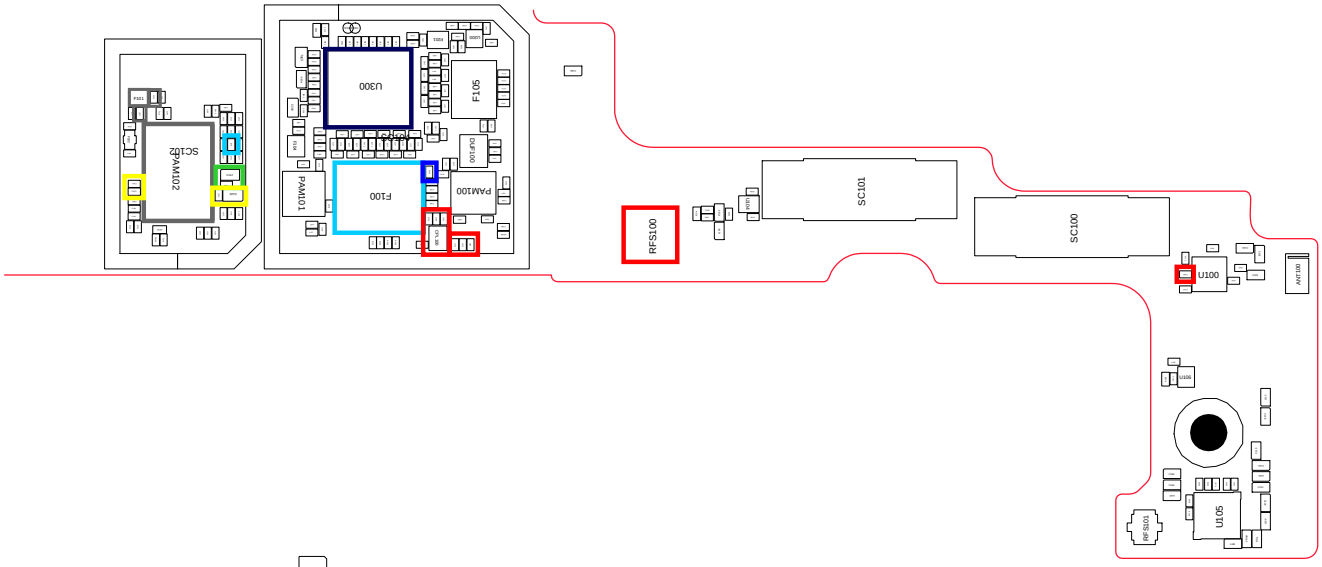

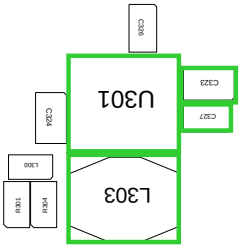

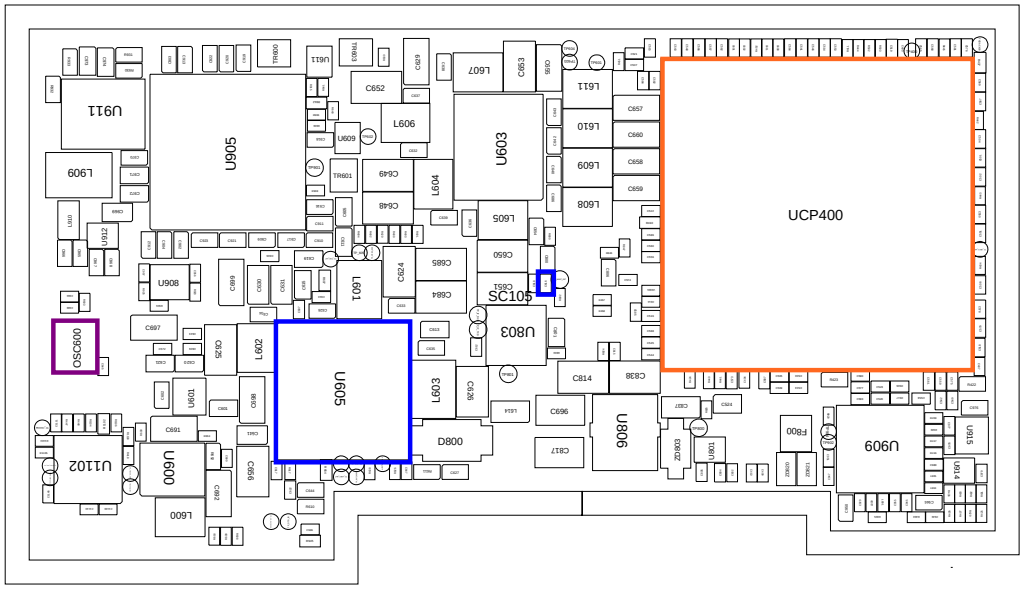

Confidential and proprietary-the contents in this service guide subject to change without prior notice.
Distribution, transmission, or infringement of any content or data from this document without Samsung's written authorization is strictly prohibited.

8-3-32. LTE Band8/ WCDMA Band8 TX

CONTINUOUS TX ON CONDITION APPLIED
LTE B8 CH : 21625
WCDMA B8 CH : 2788
RBW : 100KHz
VBW : 100KHz
SPAN : 10MHz
REF LEV. : 10dBm
ATT. : 20dB

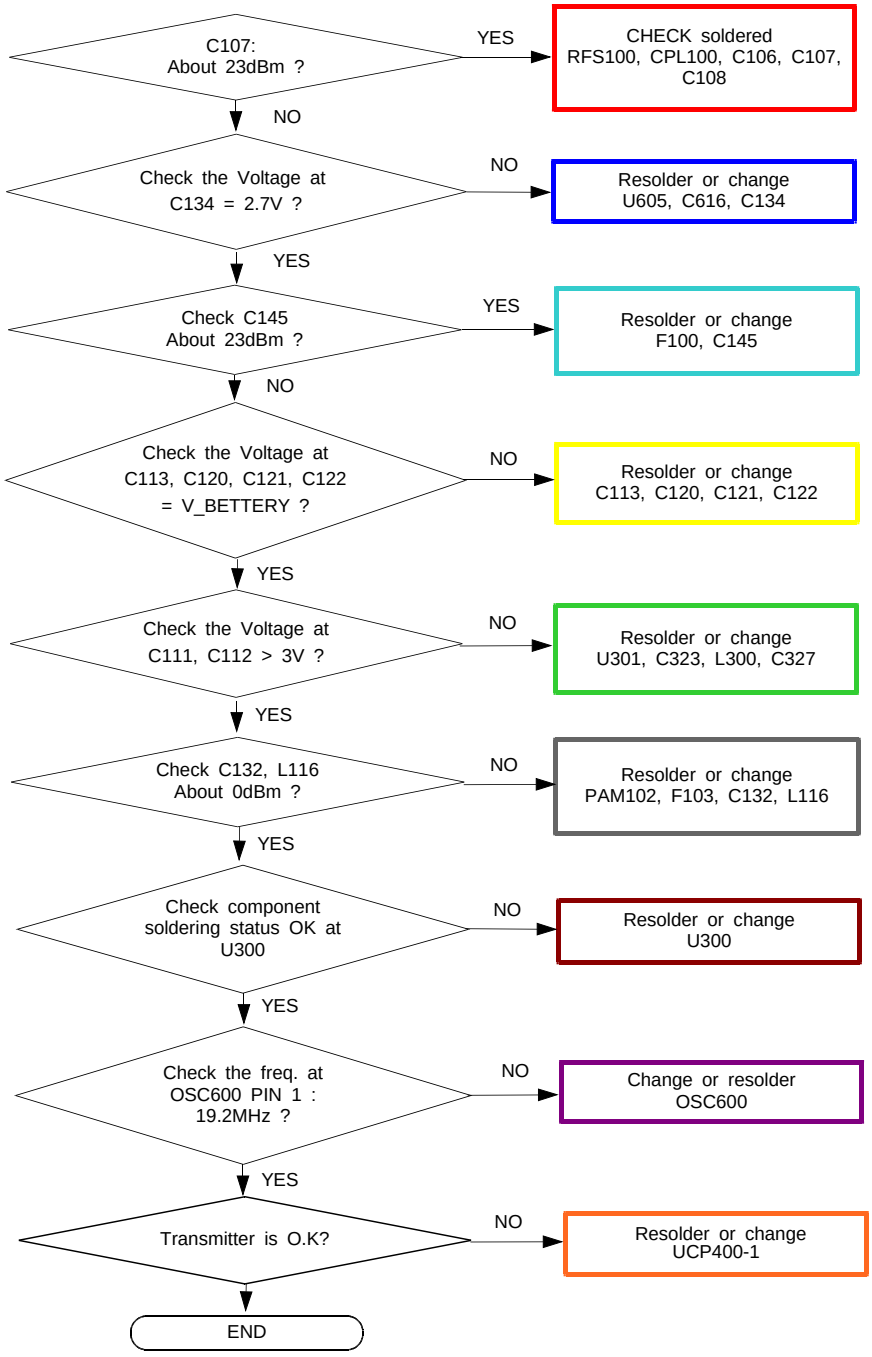

Confidential and proprietary-the contents in this service guide subject to change without prior notice.
Distribution, transmission, or infringement of any content or data from this document without Samsung's written authorization is strictly prohibited.

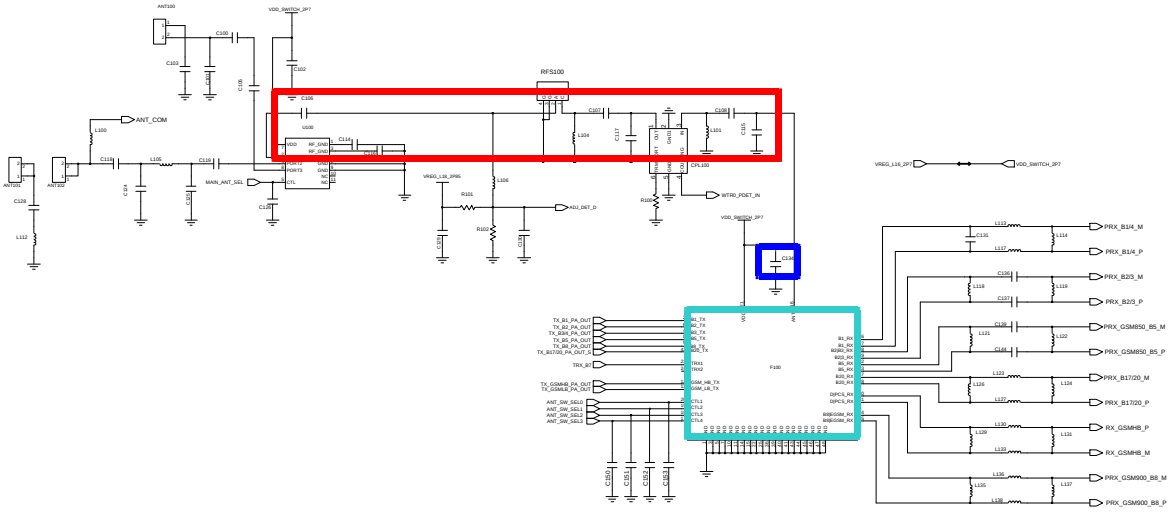

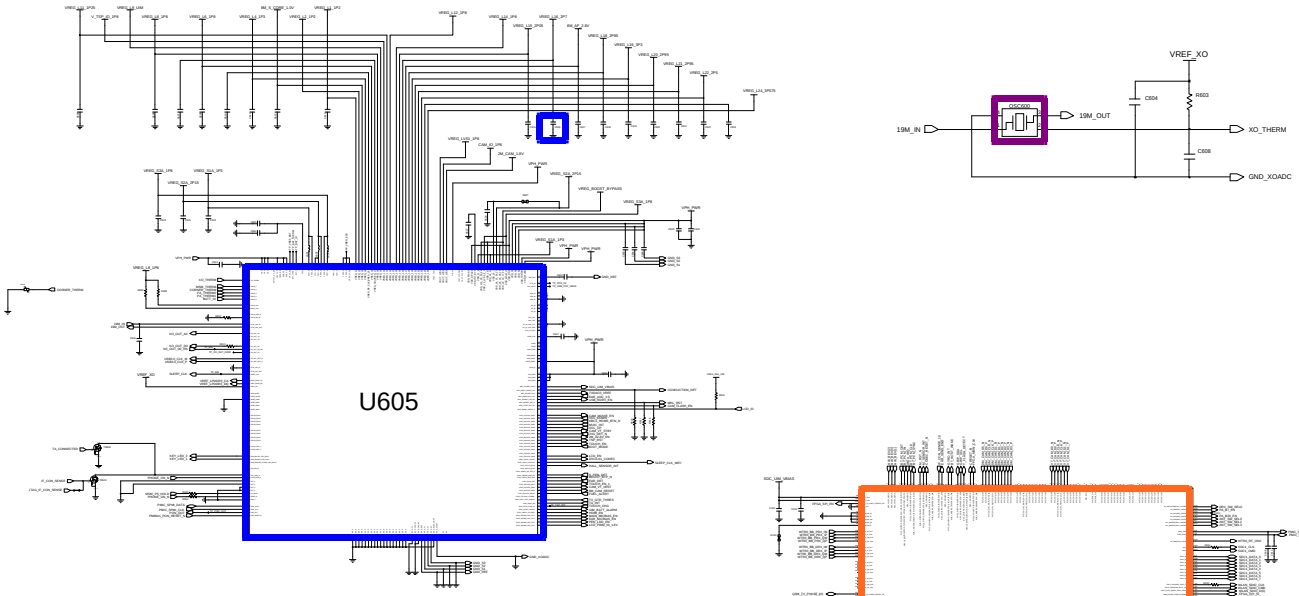

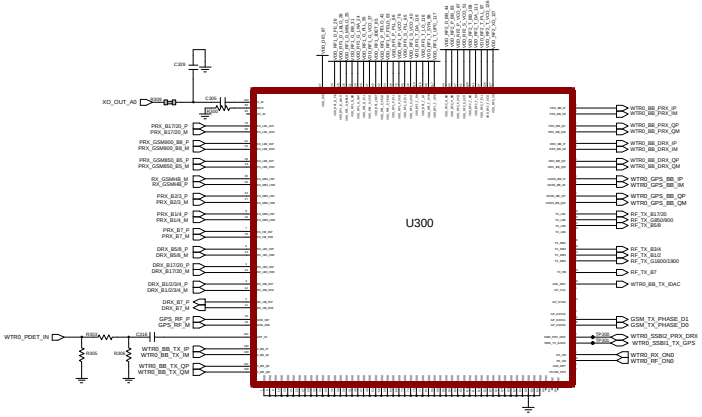

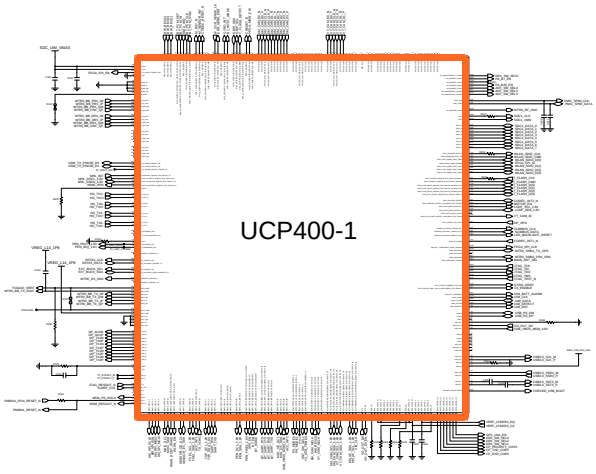

Confidential and proprietary-the contents in this service guide subject to change without prior notice.
Distribution, transmission, or infringement of any content or data from this document without Samsung's written authorization is strictly prohibited.

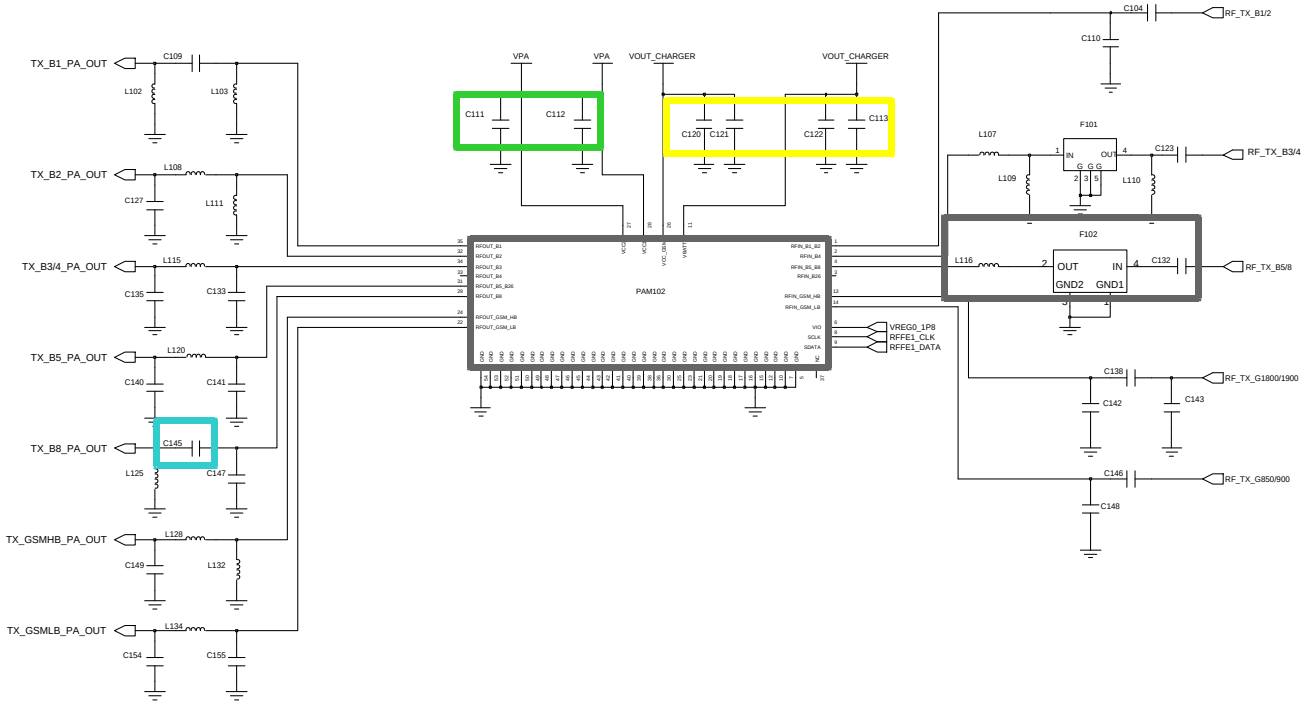

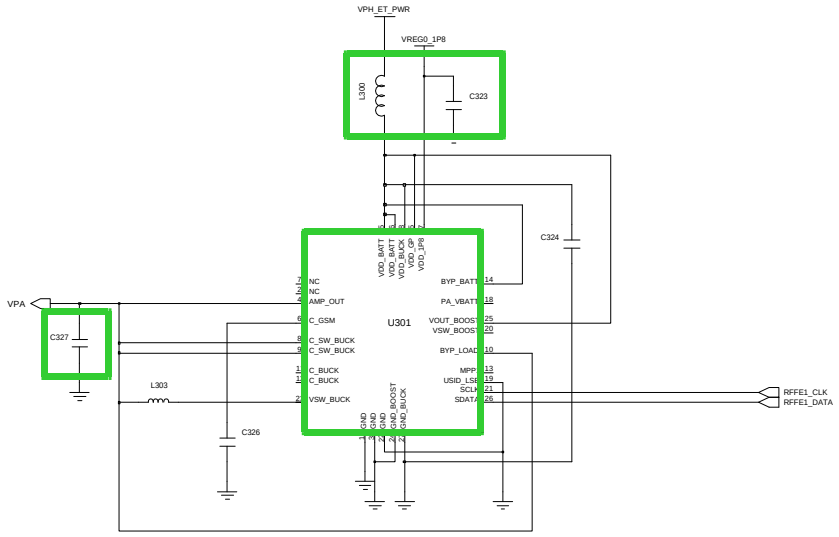

Confidential and proprietary-the contents in this service guide subject to change without prior notice.
Distribution, transmission, or infringement of any content or data from this document without Samsung's written authorization is strictly prohibited.

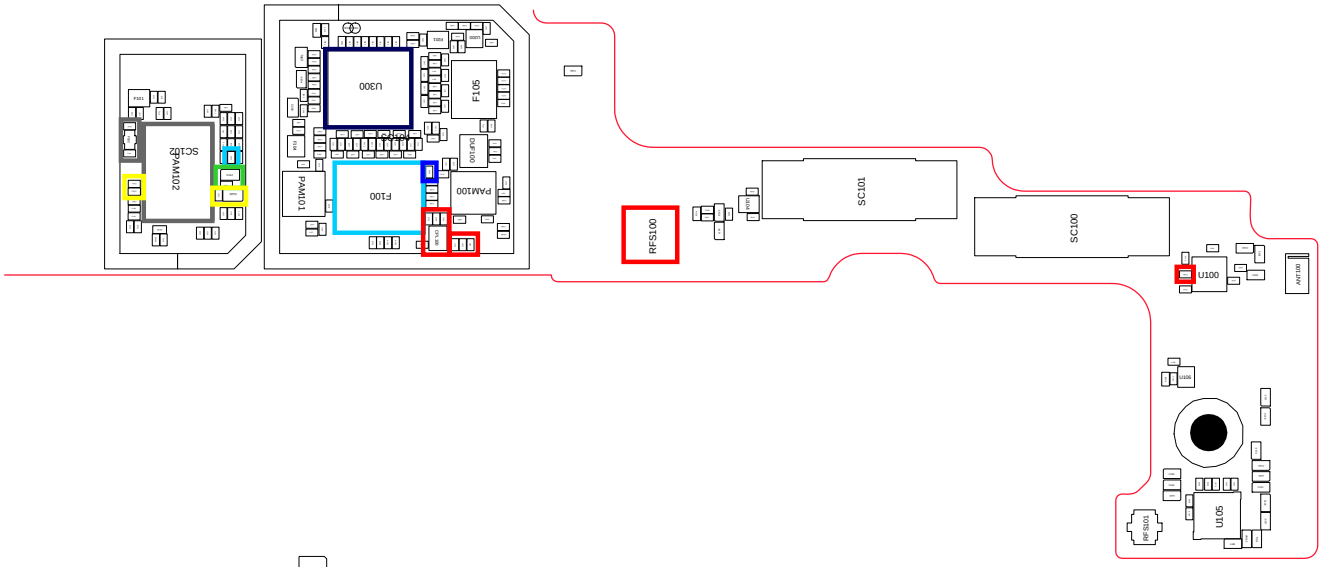

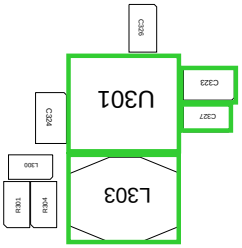

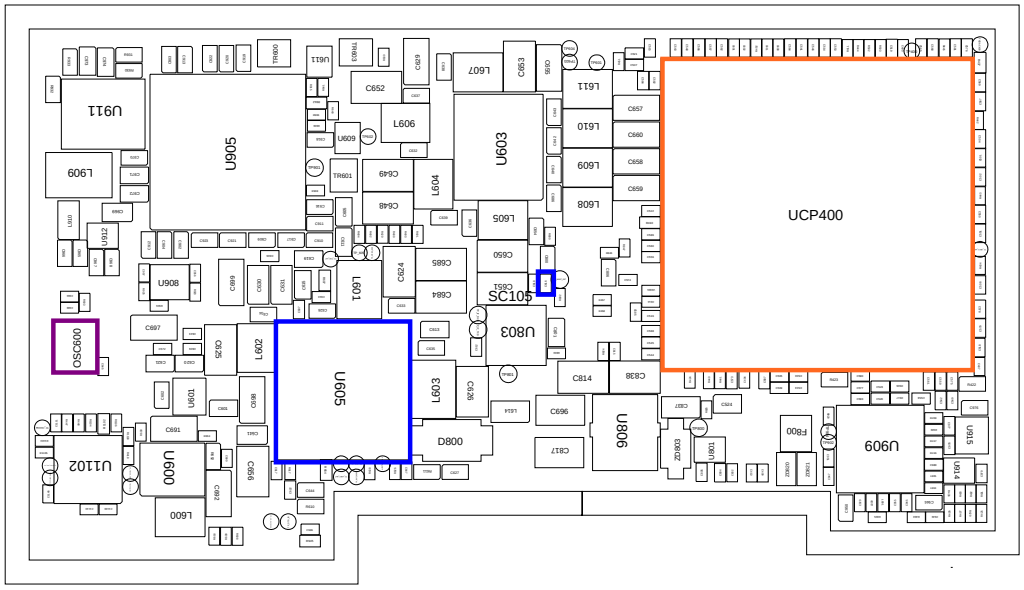

Confidential and proprietary-the contents in this service guide subject to change without prior notice.
Distribution, transmission, or infringement of any content or data from this document without Samsung's written authorization is strictly prohibited.

8-3-33. LTE Band7 TX

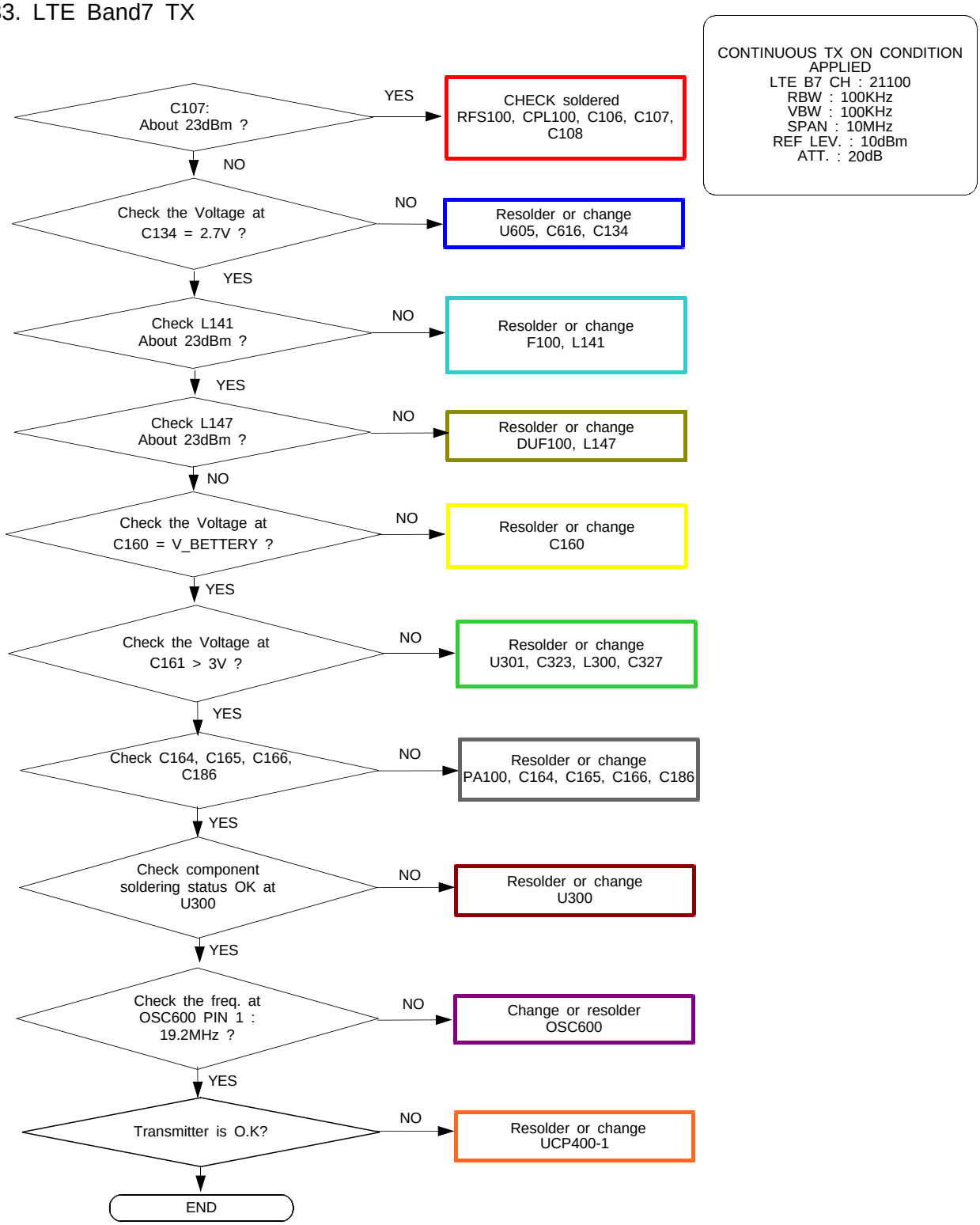

Confidential and proprietary-the contents in this service guide subject to change without prior notice.
Distribution, transmission, or infringement of any content or data from this document without Samsung's written authorization is strictly prohibited.

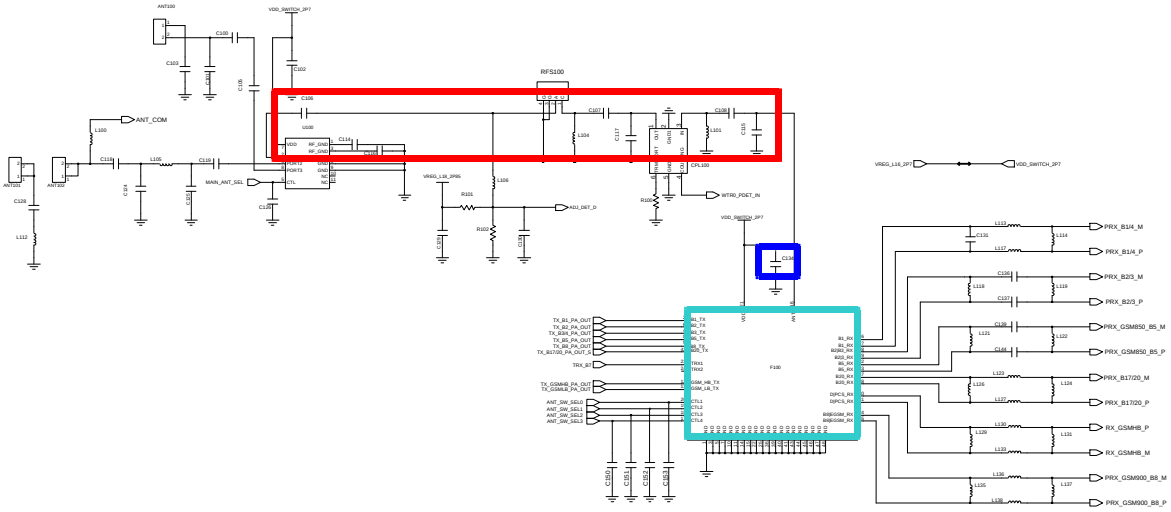

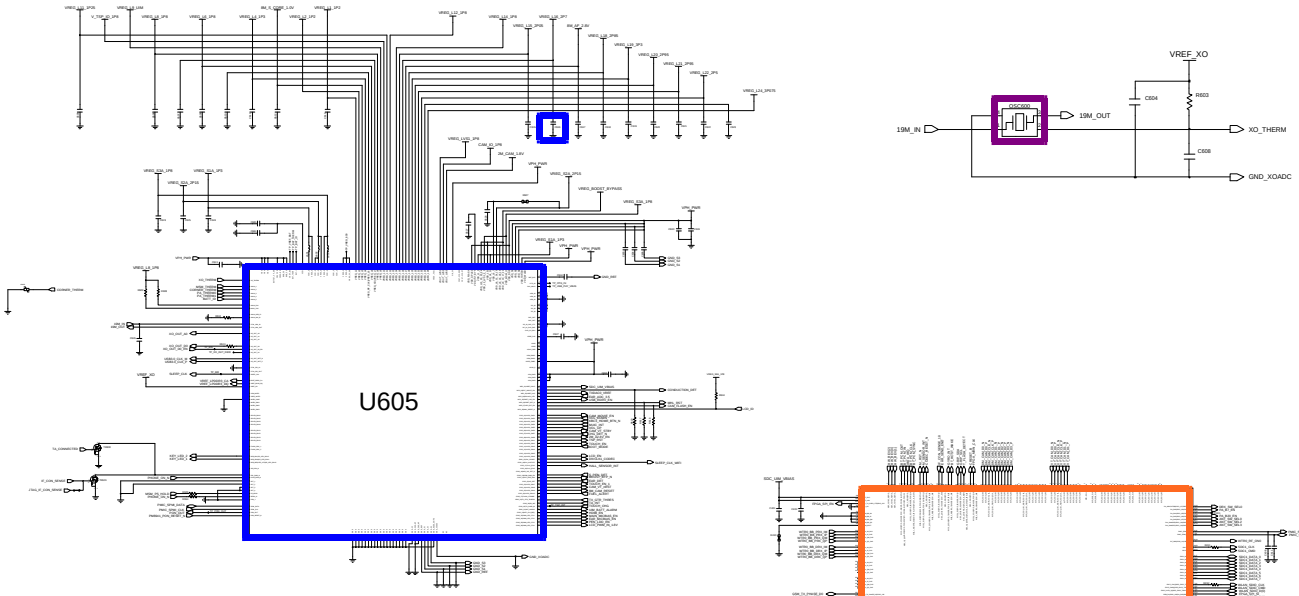

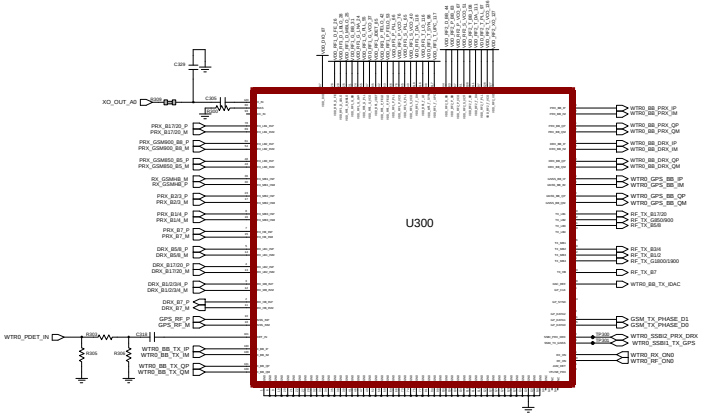

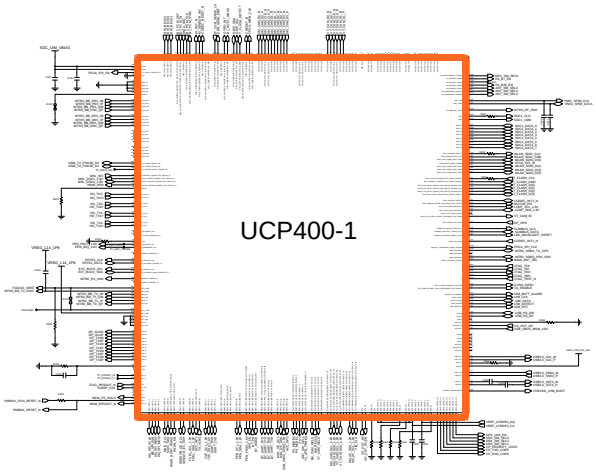

Confidential and proprietary-the contents in this service guide subject to change without prior notice.
Distribution, transmission, or infringement of any content or data from this document without Samsung's written authorization is strictly prohibited.

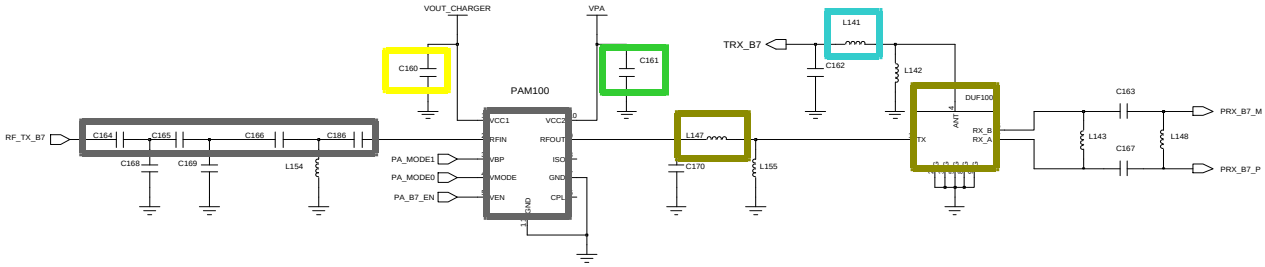

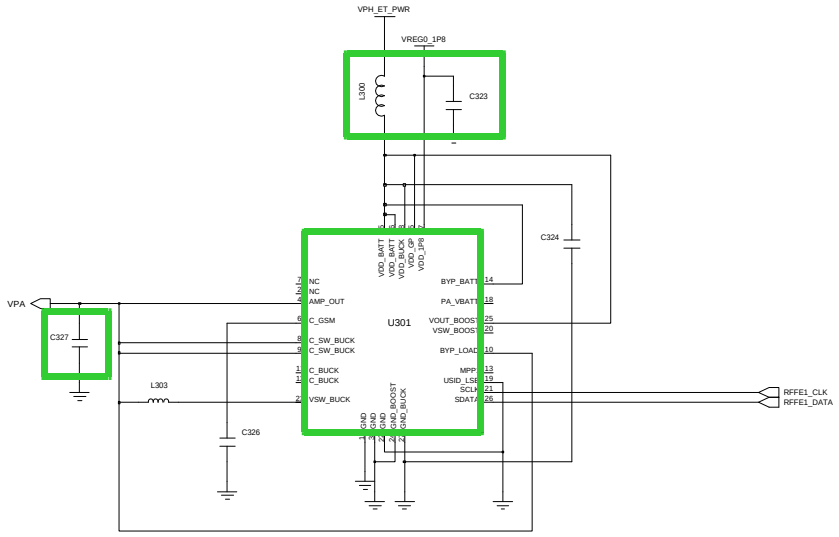

Confidential and proprietary-the contents in this service guide subject to change without prior notice.
Distribution, transmission, or infringement of any content or data from this document without Samsung's written authorization is strictly prohibited.

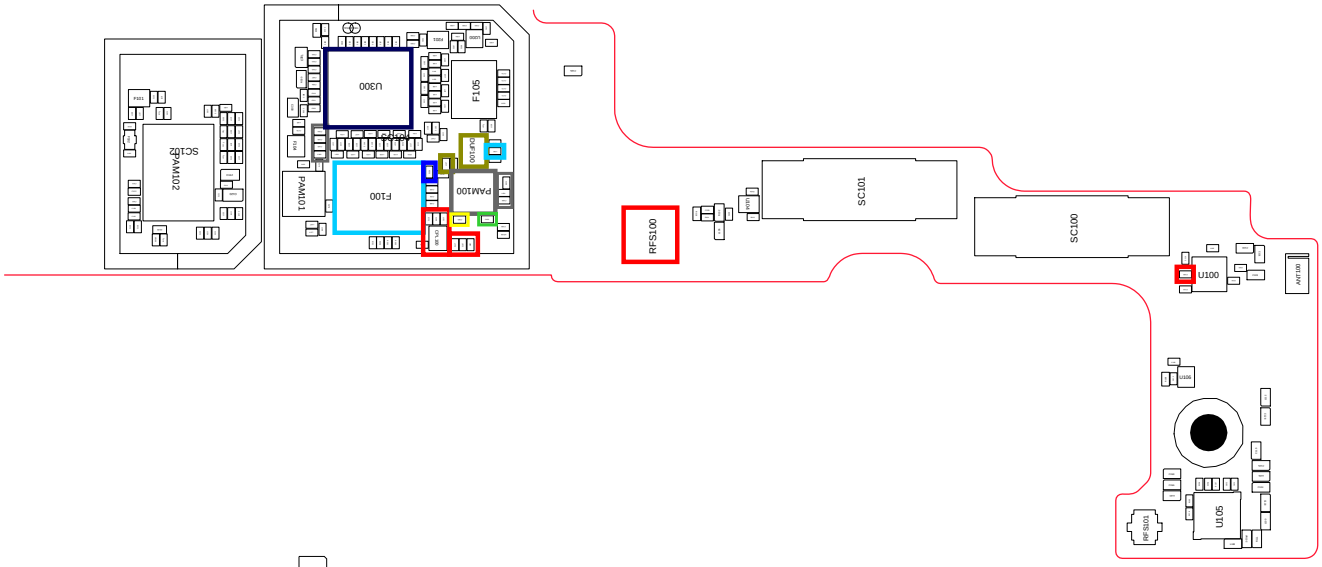
U105
RFS101
U100
ANT100
SC100
SC101
RFS100
U300
F105
PAM100
PAM101
F100
SC102
PAM102

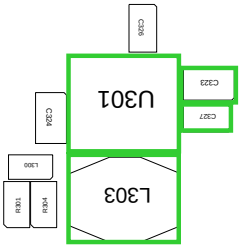
L303
U301
C327
C323
C324
C326

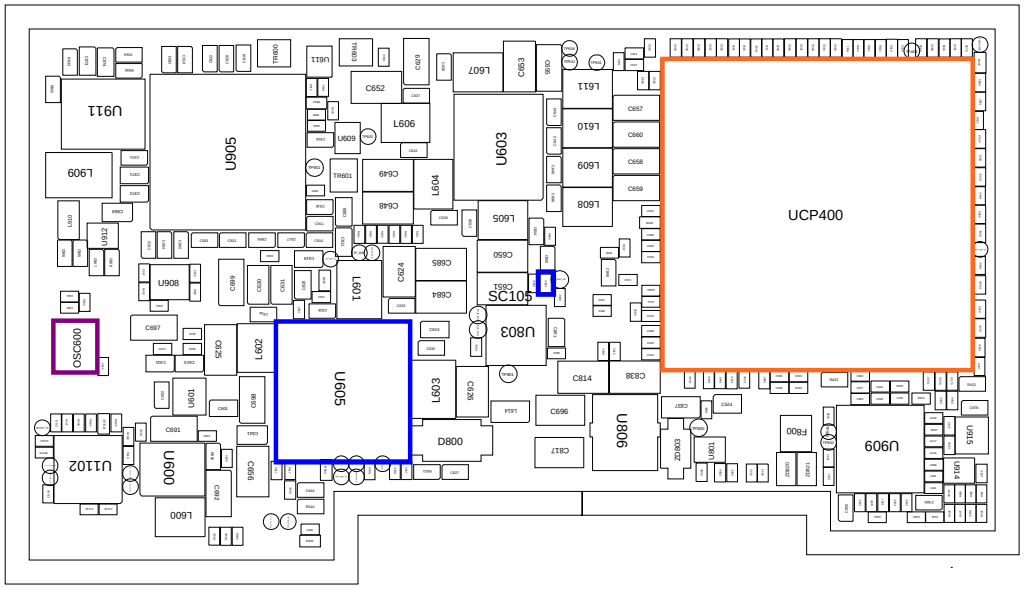
UCP400
U909
U905
U911
U603
SC105
U803
U806
U605
U600
U1102
L601
L602
L603
L604
L605
L607
L608
L609
L610
L611
L909
L915
L914
L600
F900
OSC600
U906
U912
U601
D800
C814
C838
C652
C649
C648
C684
C685
C650
C653
C657
C660
C658
C659
C697
C699
C696
C692
C693
C696
C617
C696
C824
C829
C825
C826
C827
C837
C834
TR601
TR600
TR611
TR601
TR602
TR603
TR604
TR605
TR606
TR607
TR608
TR609
TR610
TR611
TR612
TR613
TR614
TR615
TR616
TR617
TR618
TR619
TR620
TR621
TR622
TR623
TR624
TR625
TR626
TR627
TR628
TR629
TR630
TR631
TR632
TR633
TR634
TR635
TR636
TR637
TR638
TR639
TR640

8-3-34. LTE Band20 TX

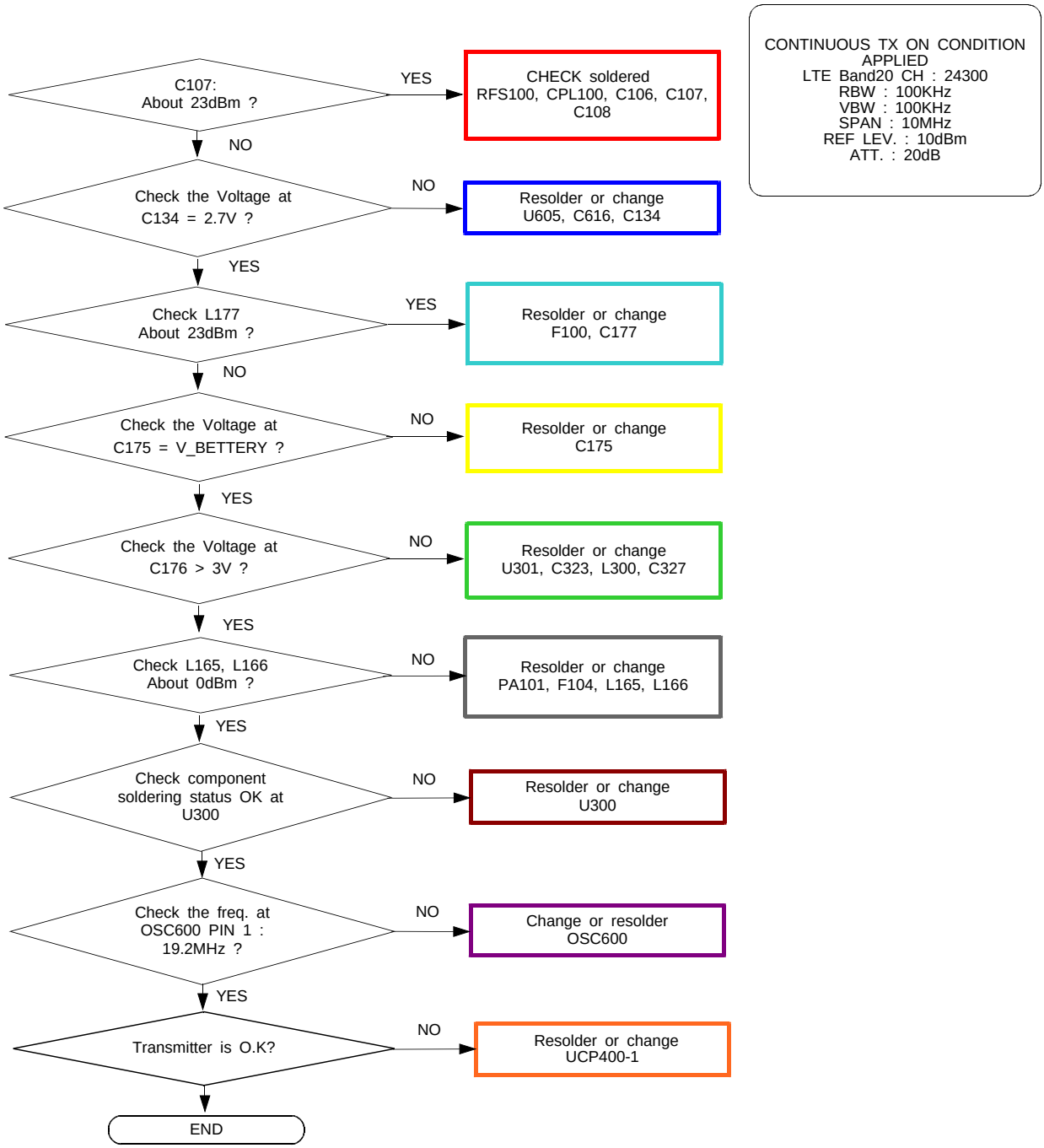

Confidential and proprietary-the contents in this service guide subject to change without prior notice.
Distribution, transmission, or infringement of any content or data from this document without Samsung's written authorization is strictly prohibited.

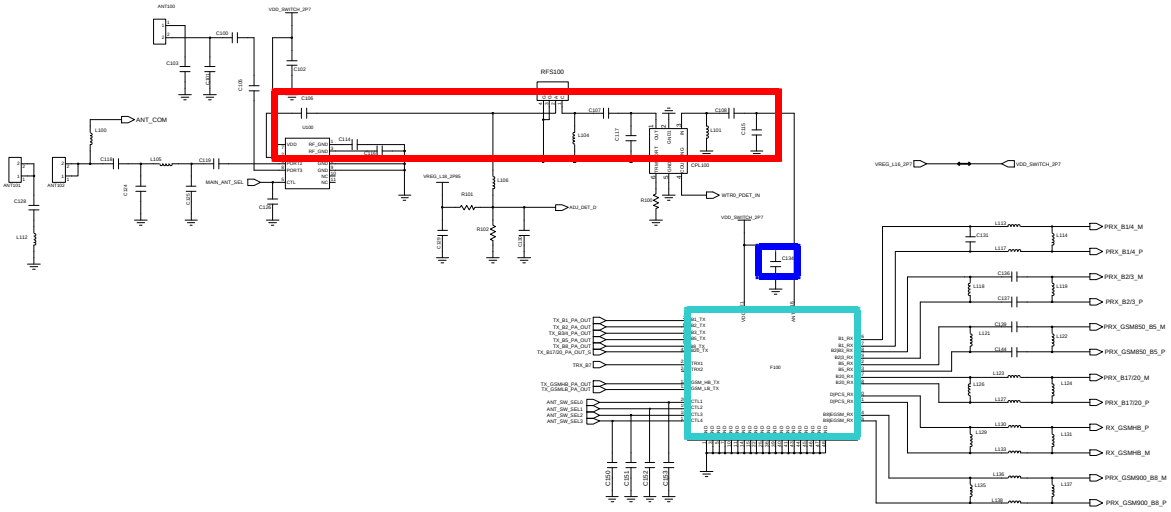

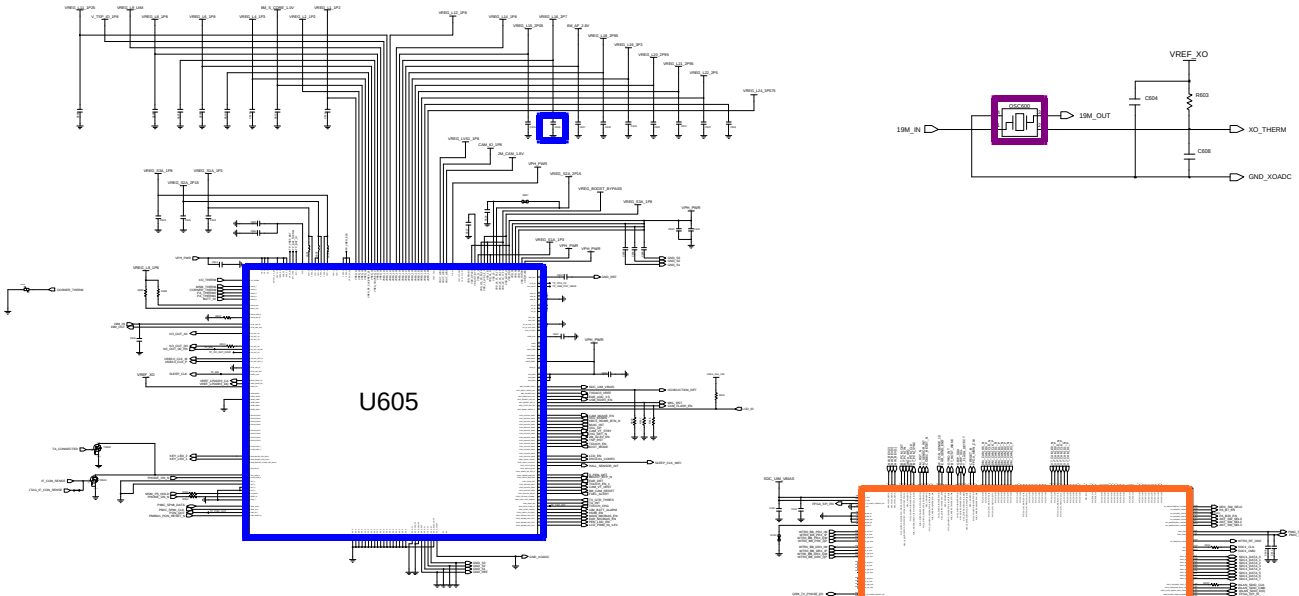

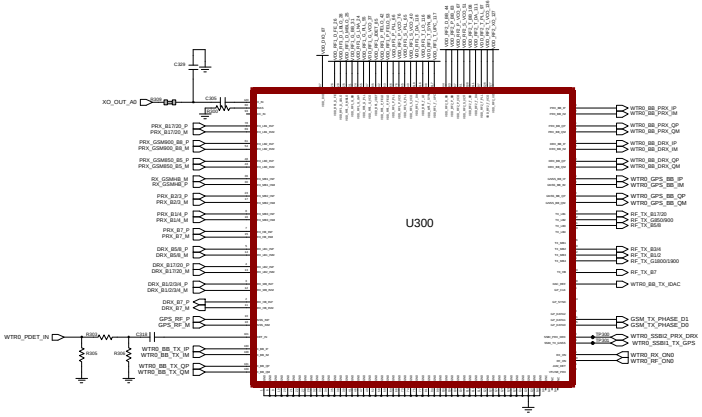

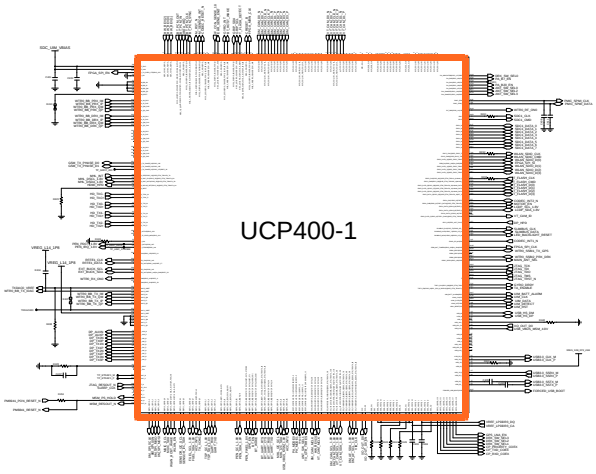

Confidential and proprietary-the contents in this service guide subject to change without prior notice.
Distribution, transmission, or infringement of any content or data from this document without Samsung's written authorization is strictly prohibited.

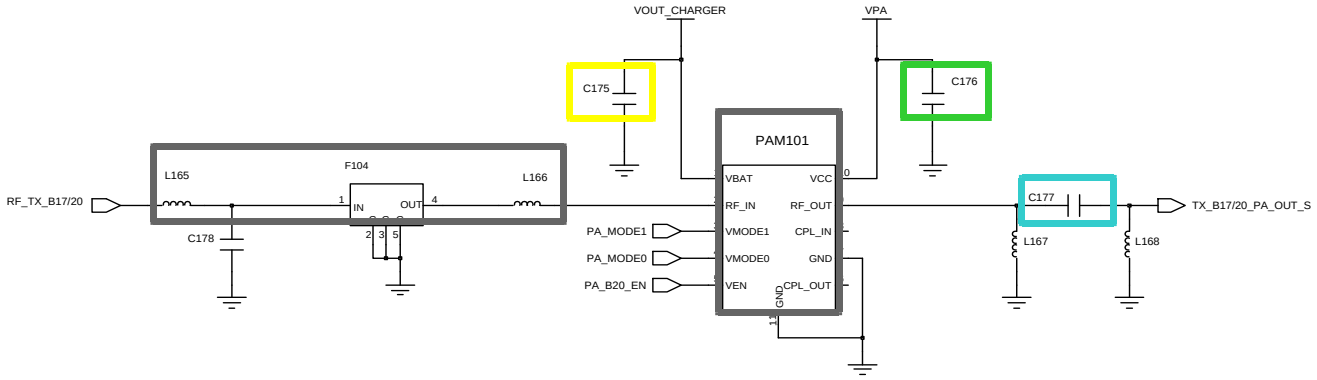

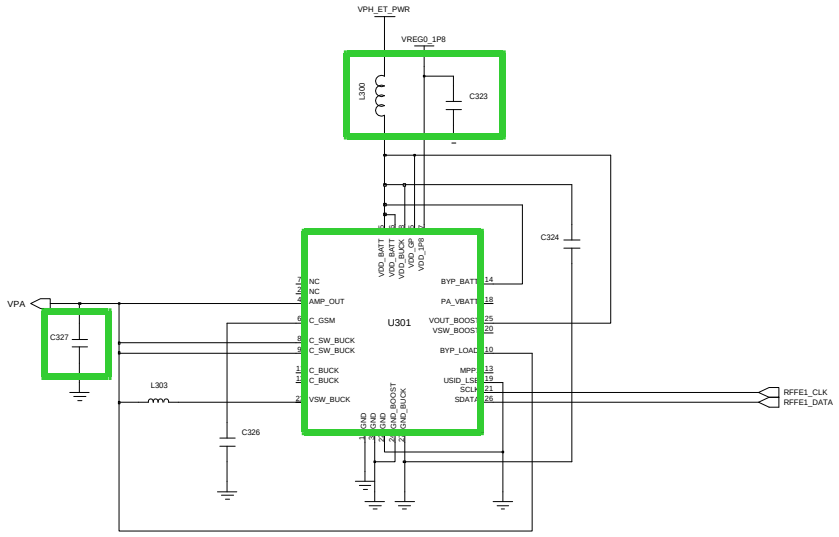

Confidential and proprietary-the contents in this service guide subject to change without prior notice.
Distribution, transmission, or infringement of any content or data from this document without Samsung's written authorization is strictly prohibited.

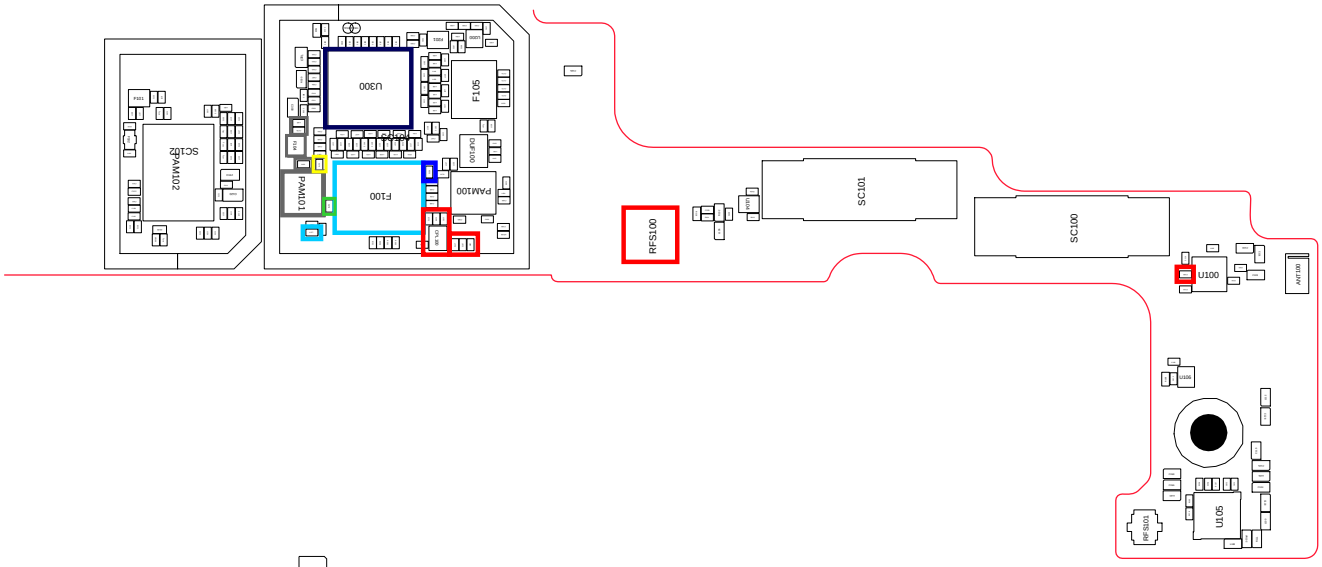

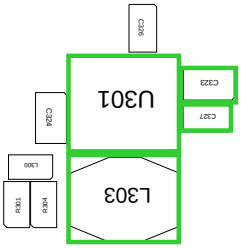

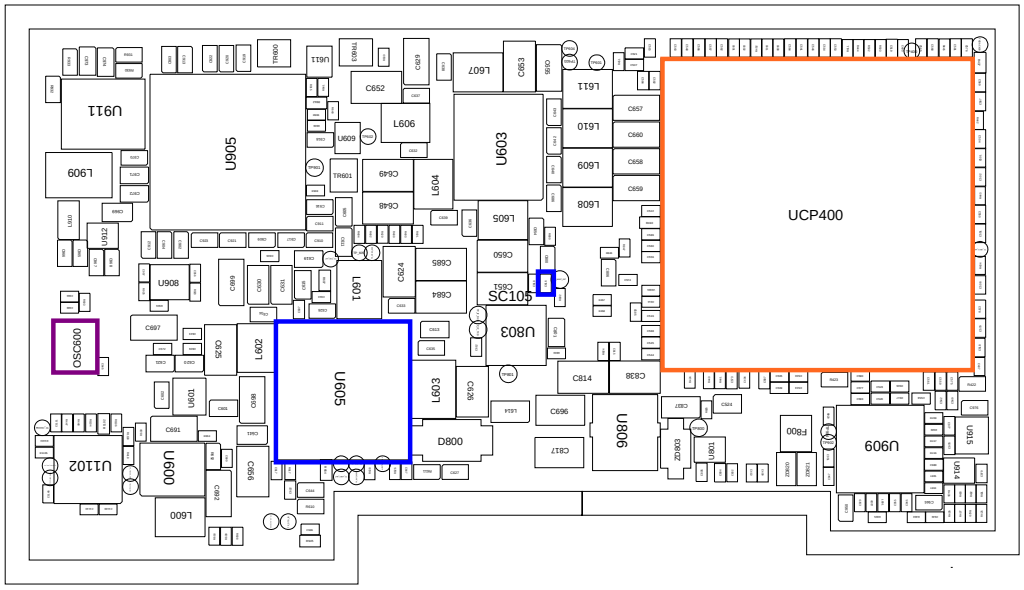
UCP400
U909
U914
U915
F900
U901
ZD903
U806
C814
C838
U803
SC105
C681
U603
L607
C653
C656
L611
L610
L609
L608
C657
C660
C658
C659
C652
C649
C648
L604
L605
C650
C685
C684
C624
L601
U905
U911
L909
U912
U906
C699
C690
C691
C697
OSC600
C625
L602
U605
L603
C636
D806
C817
C696
C692
U600
U1102
L600
U611
TR601
TR600
C629
C653
C656
L607
C652
C649
C648
L604
L605
C650
C685
C684
C624
L601

8-3-35. LTE Band1/ LTE Band3/ WCDMA Band1 DRX

CONTINUOUS RX ON
RF INPUT : LTE B1: 300CH
LTE B3: 1575CH
WCDMA B1: 10700CH
AMP : -50dBm

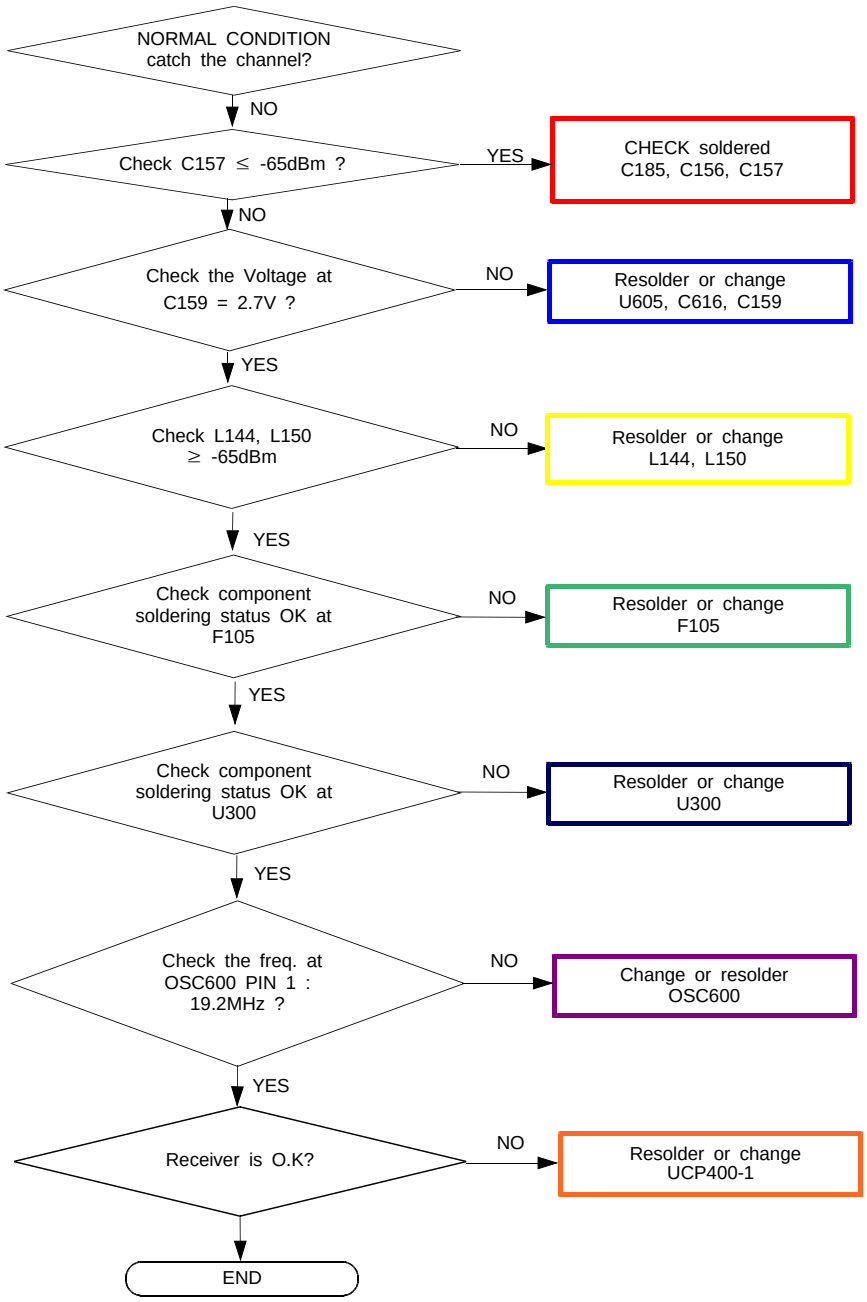

Confidential and proprietary-the contents in this service guide subject to change without prior notice.
Distribution, transmission, or infringement of any content or data from this document without Samsung's written authorization is strictly prohibited.

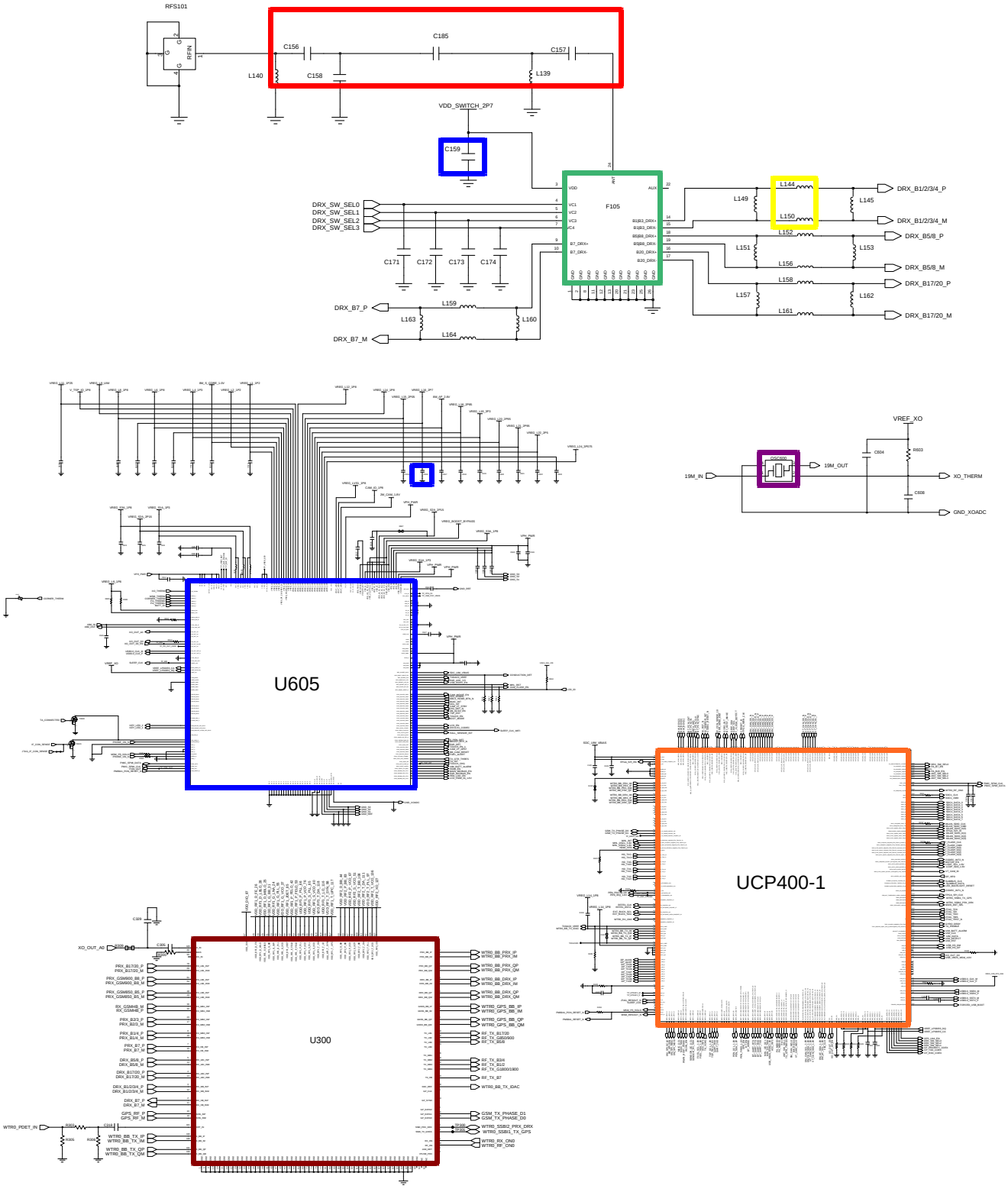

Confidential and proprietary-the contents in this service guide subject to change without prior notice.
Distribution, transmission, or infringement of any content or data from this document without Samsung's written authorization is strictly prohibited.

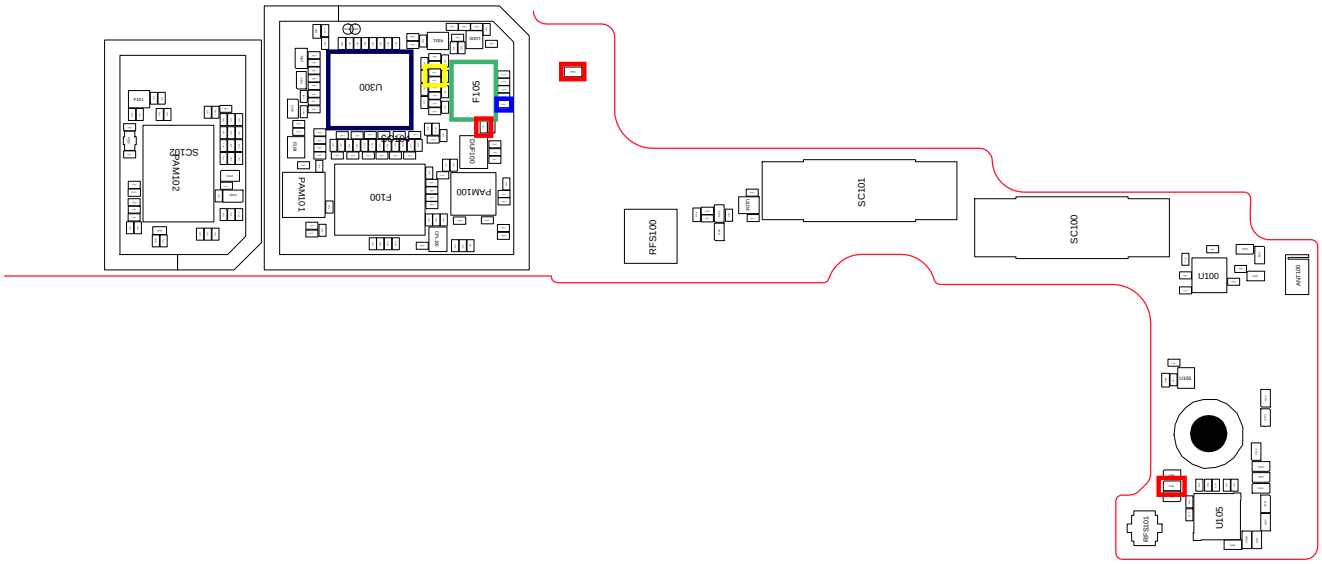

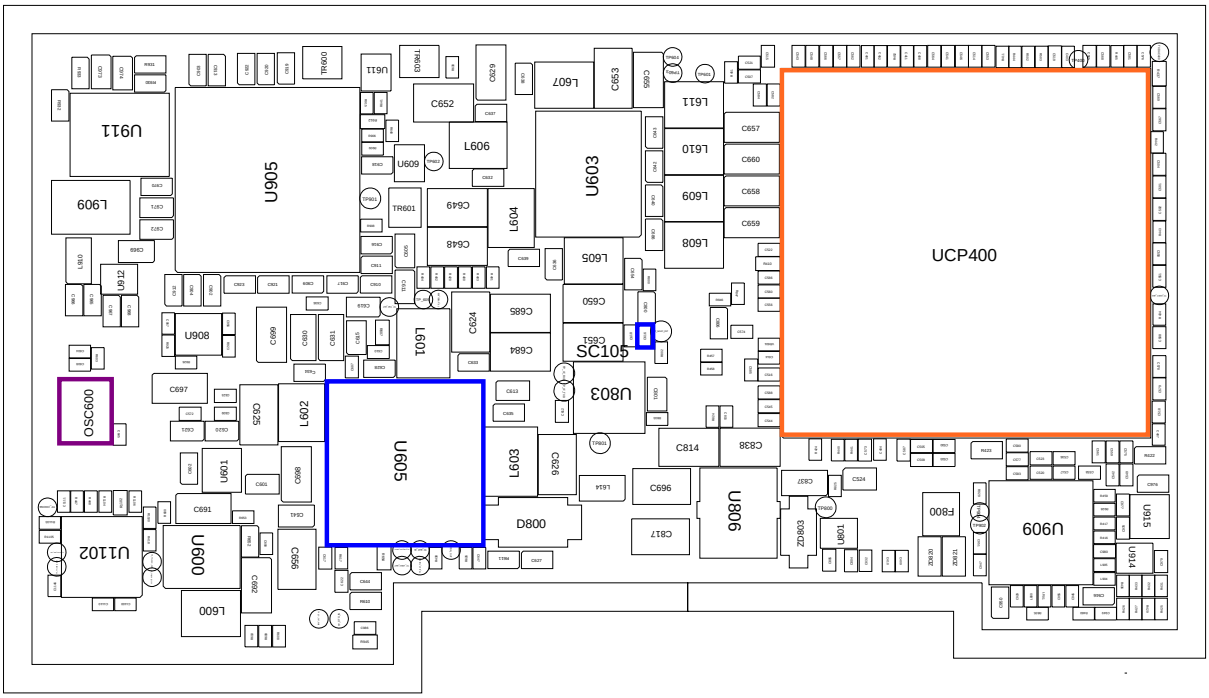

Confidential and proprietary-the contents in this service guide subject to change without prior notice.
Distribution, transmission, or infringement of any content or data from this document without Samsung's written authorization is strictly prohibited.

8-3-36. LTE Band5/ LTE Band8/ WCDMA Band5/ WCDMA Band8 DRX

CONTINUOUS RX ON
RF INPUT : LTE B5: 2525CH
LTE B8: 3625CH
WCDMA B5: 4408CH
WCDMA B8: 3013CH
AMP : -50dBm

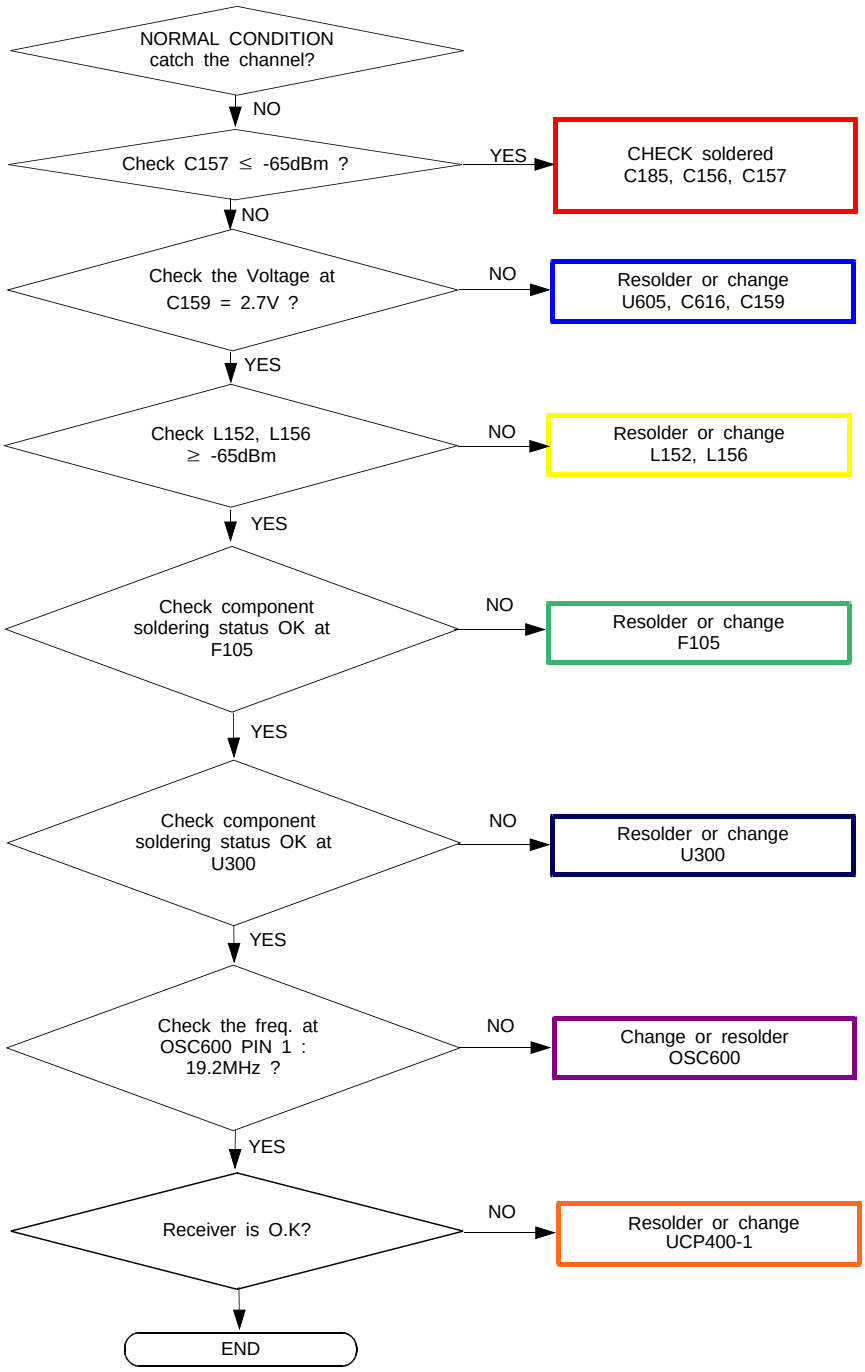

Confidential and proprietary-the contents in this service guide subject to change without prior notice.
Distribution, transmission, or infringement of any content or data from this document without Samsung's written authorization is strictly prohibited.

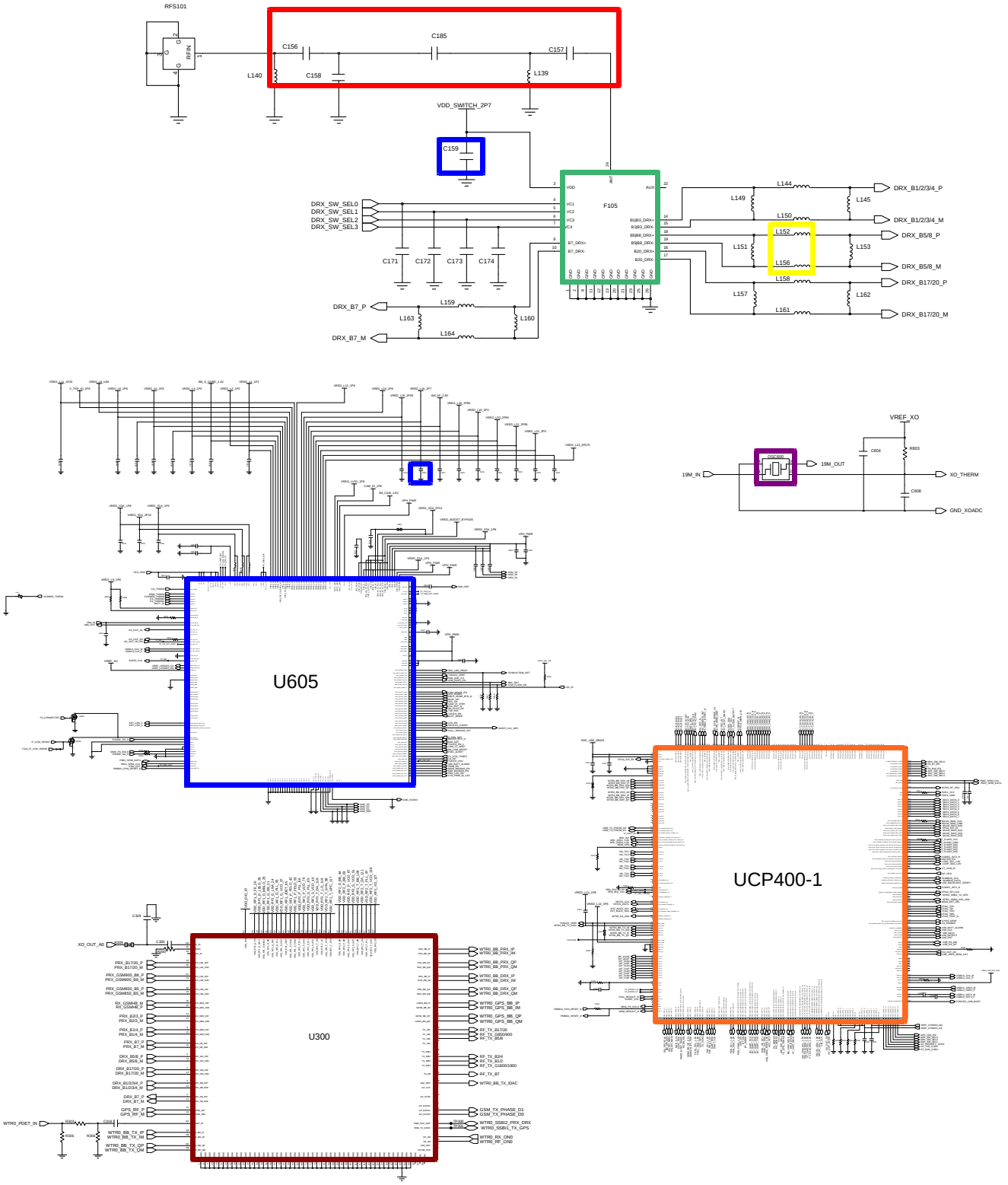

Confidential and proprietary-the contents in this service guide subject to change without prior notice.
Distribution, transmission, or infringement of any content or data from this document without Samsung's written authorization is strictly prohibited.

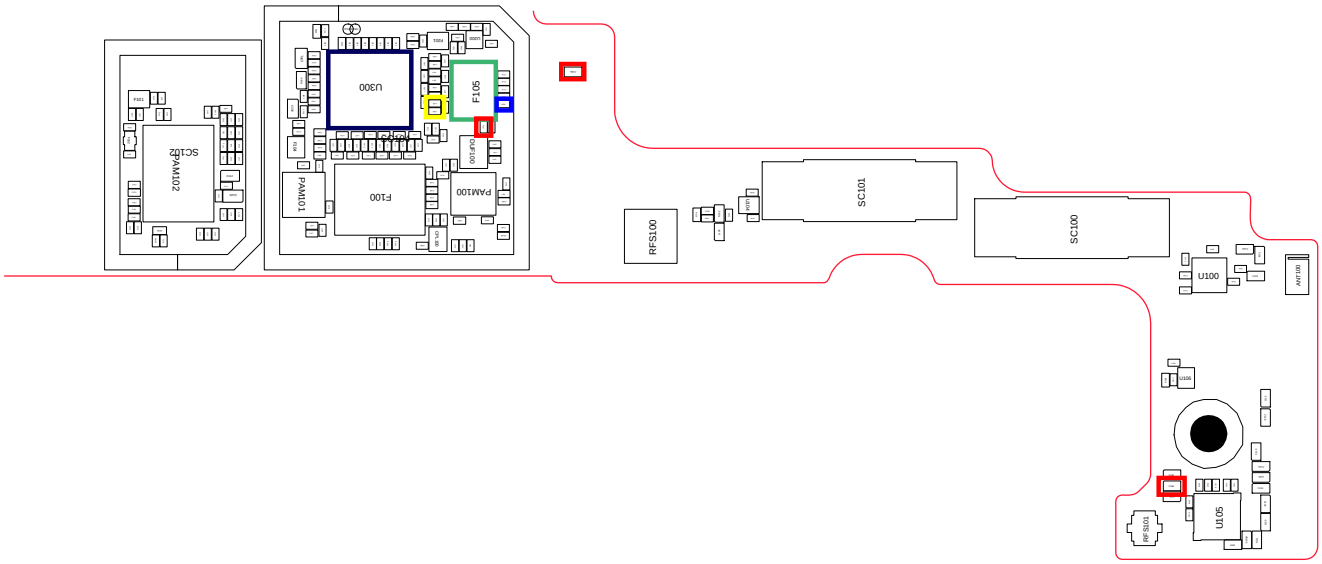

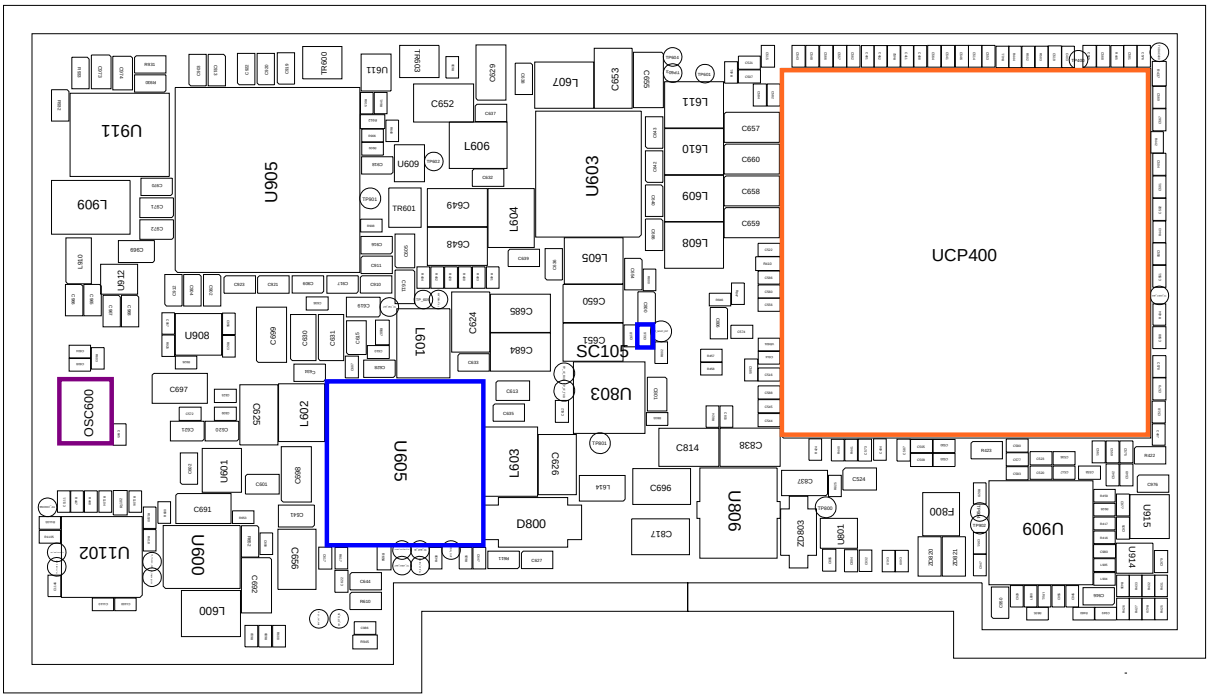

Confidential and proprietary-the contents in this service guide subject to change without prior notice.
Distribution, transmission, or infringement of any content or data from this document without Samsung's written authorization is strictly prohibited.

8-3-37. LTE Band7 DRX

CONTINUOUS RX ON
RF INPUT : LTE B7: 3100CH
AMP : -50dBm

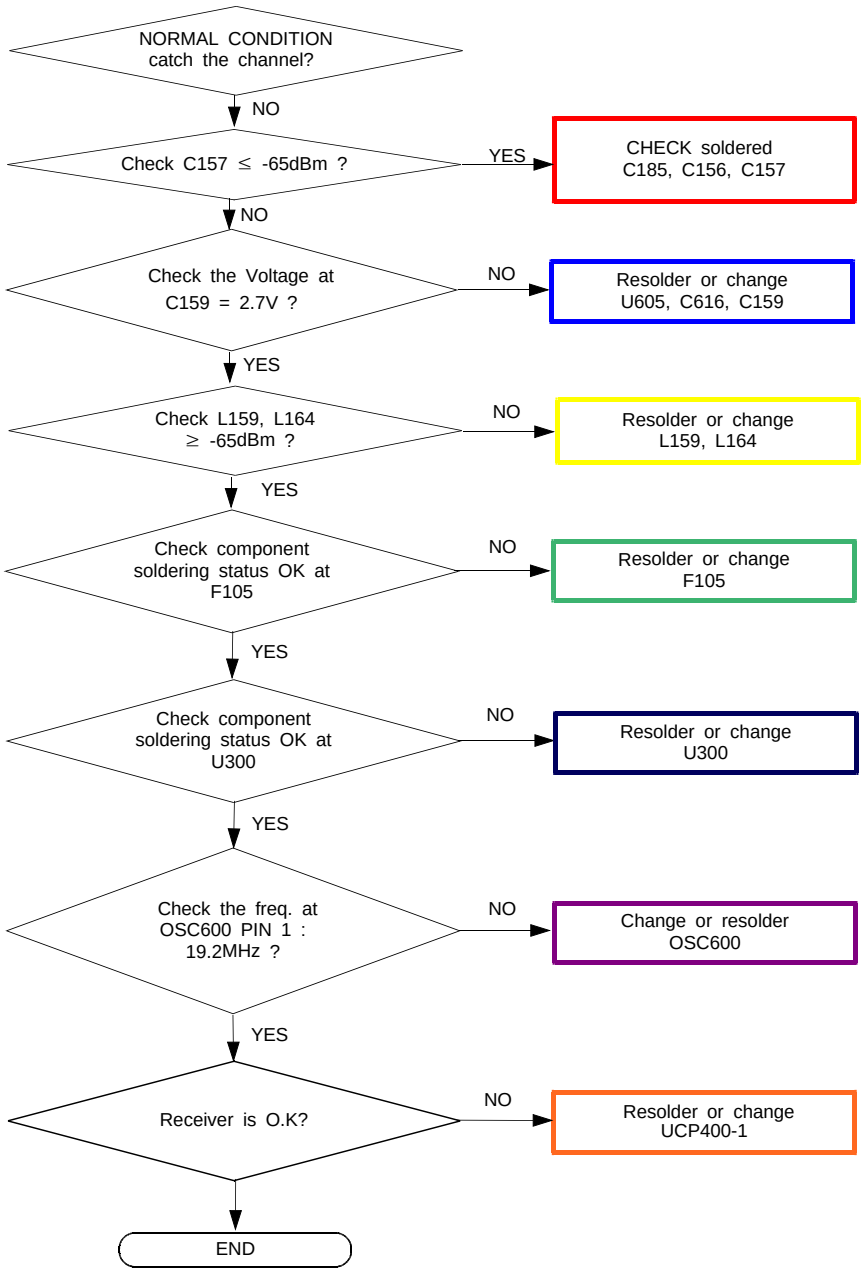

Confidential and proprietary-the contents in this service guide subject to change without prior notice.
Distribution, transmission, or infringement of any content or data from this document without Samsung's written authorization is strictly prohibited.

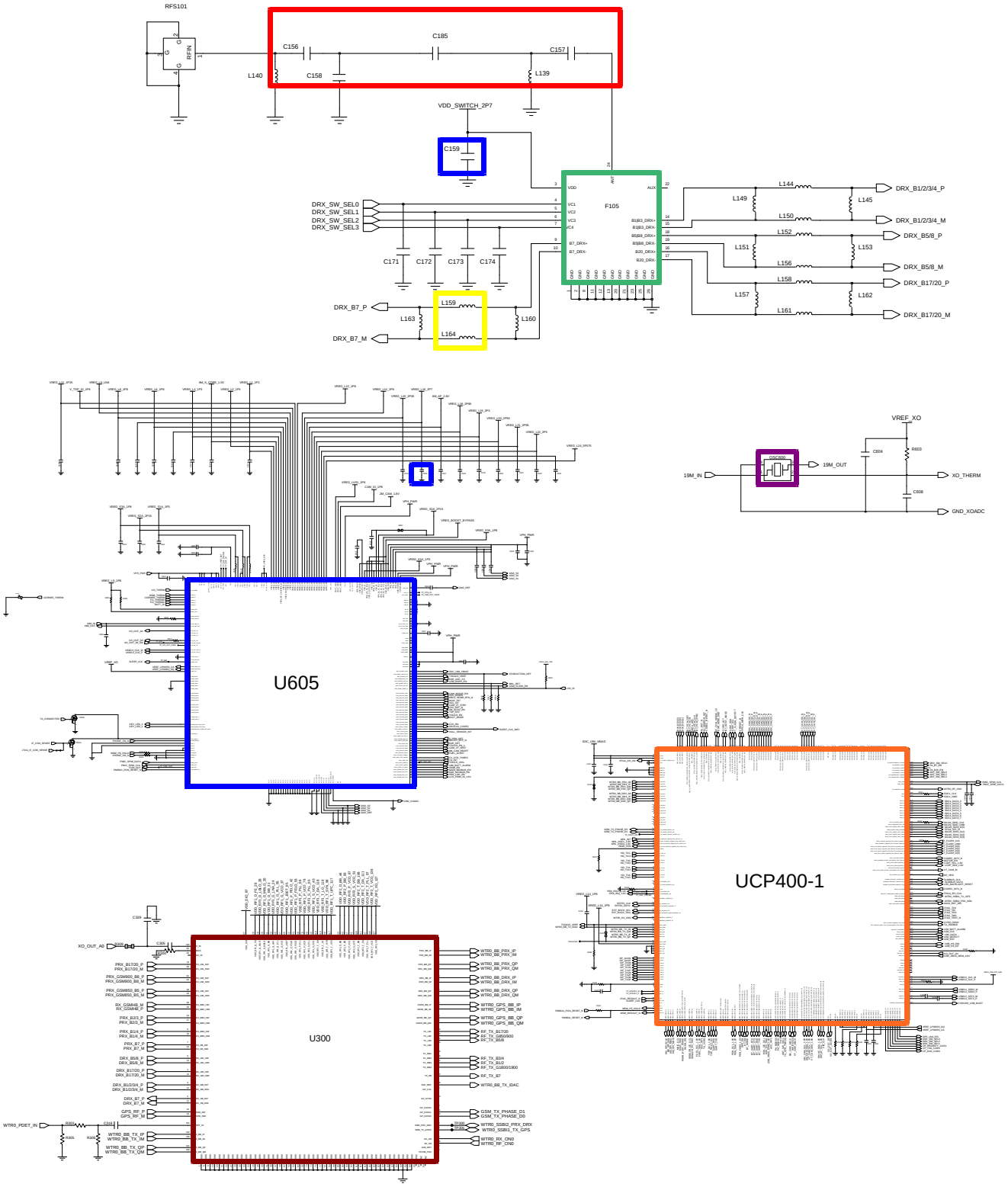

Confidential and proprietary-the contents in this service guide subject to change without prior notice.
Distribution, transmission, or infringement of any content or data from this document without Samsung's written authorization is strictly prohibited.

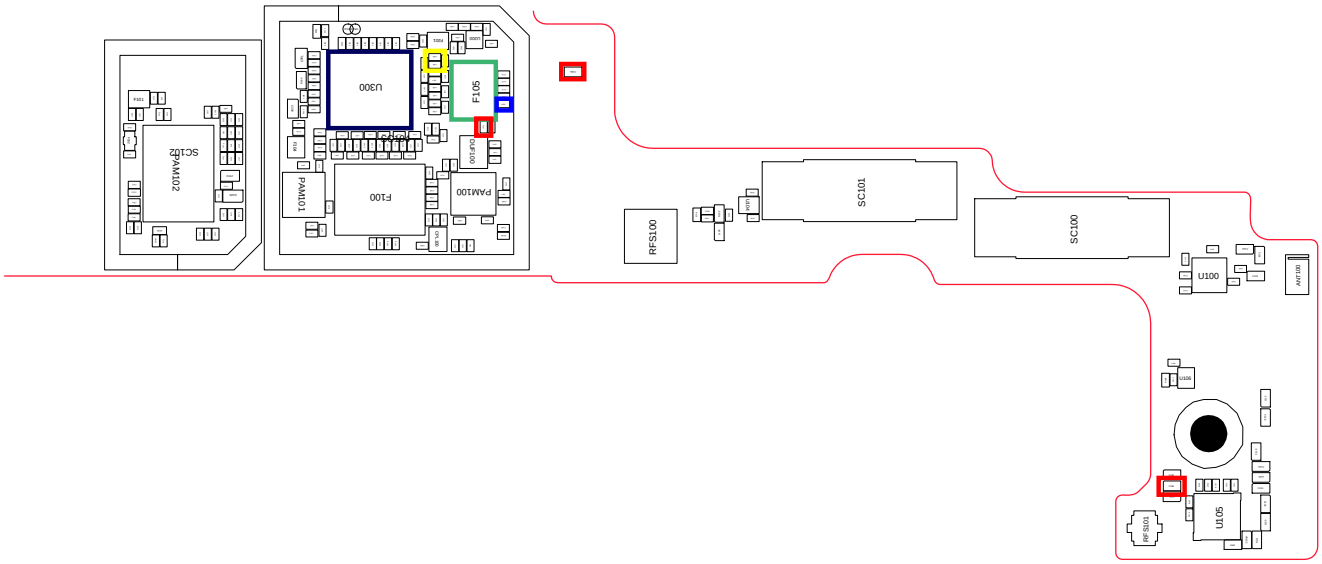

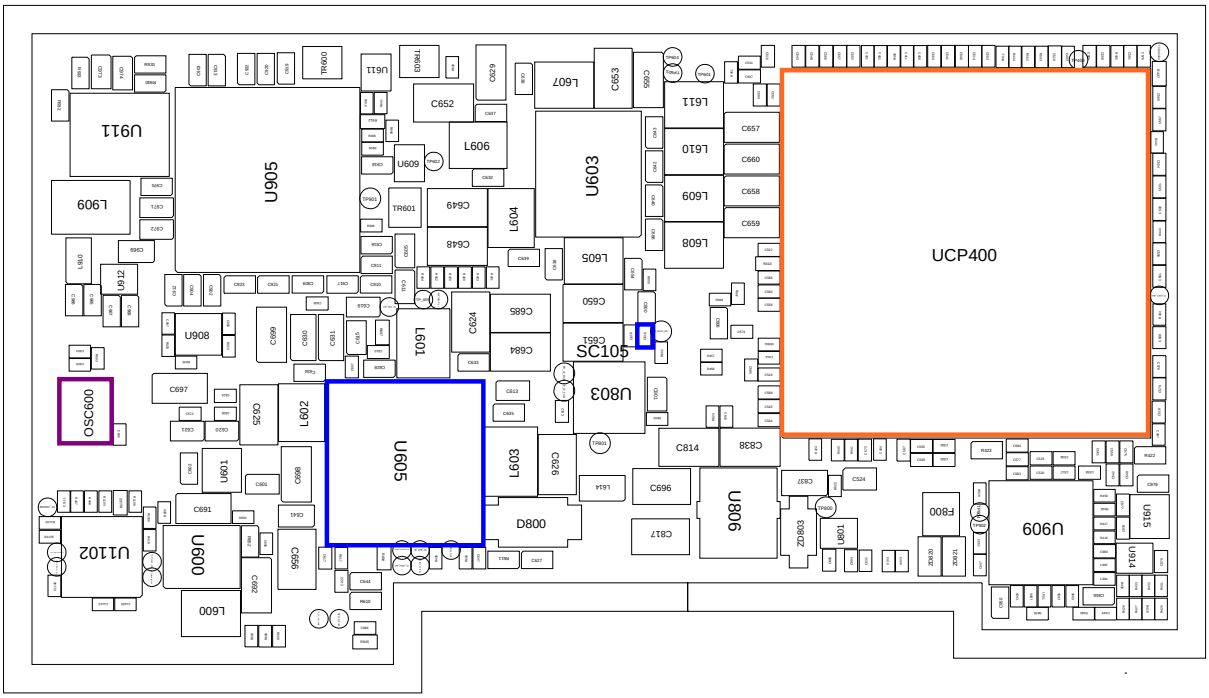

Confidential and proprietary-the contents in this service guide subject to change without prior notice.
Distribution, transmission, or infringement of any content or data from this document without Samsung's written authorization is strictly prohibited.

8-3-38. LTE Band20 DRX

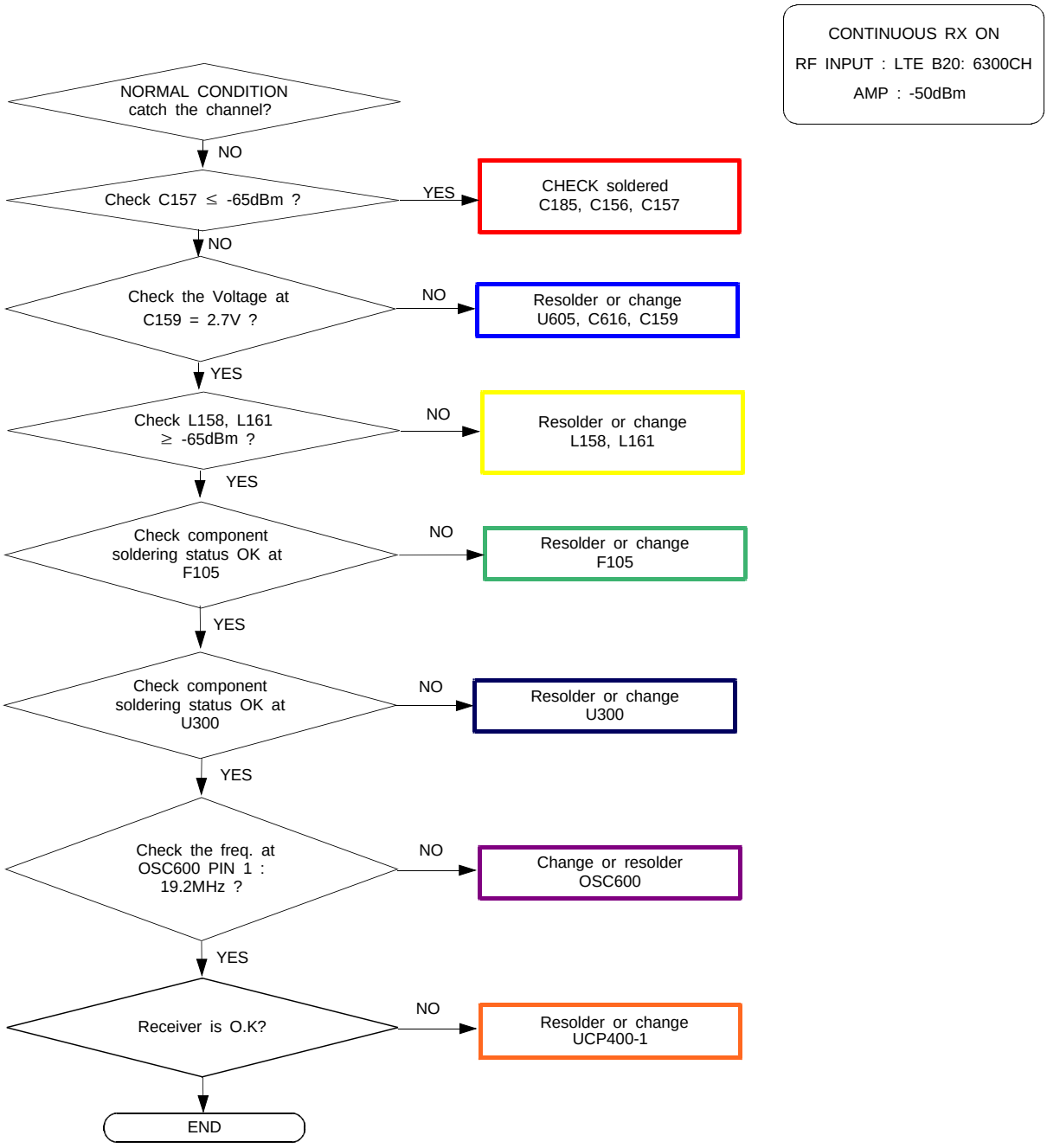

Confidential and proprietary-the contents in this service guide subject to change without prior notice.
Distribution, transmission, or infringement of any content or data from this document without Samsung's written authorization is strictly prohibited.

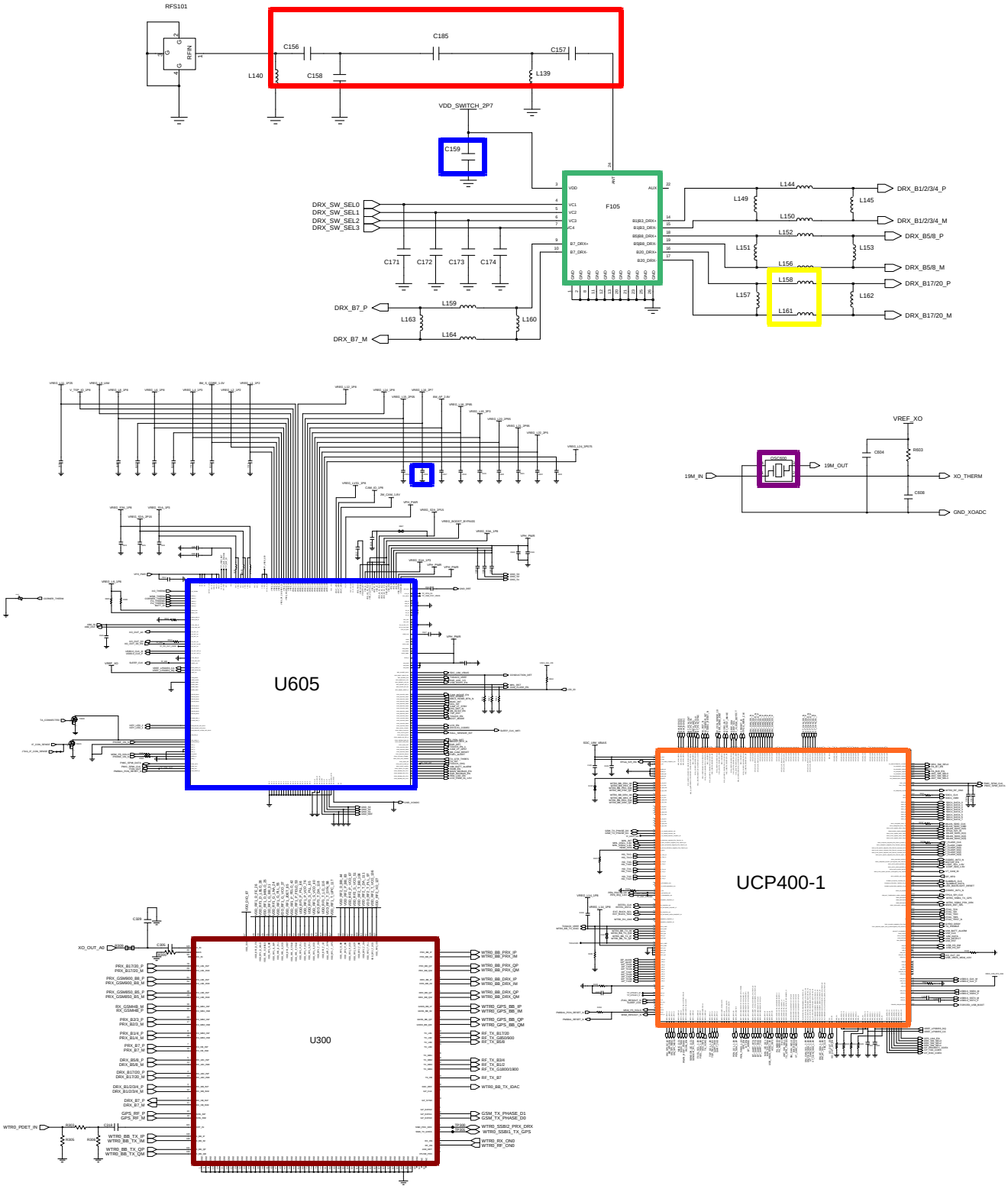

Confidential and proprietary-the contents in this service guide subject to change without prior notice.
Distribution, transmission, or infringement of any content or data from this document without Samsung's written authorization is strictly prohibited.

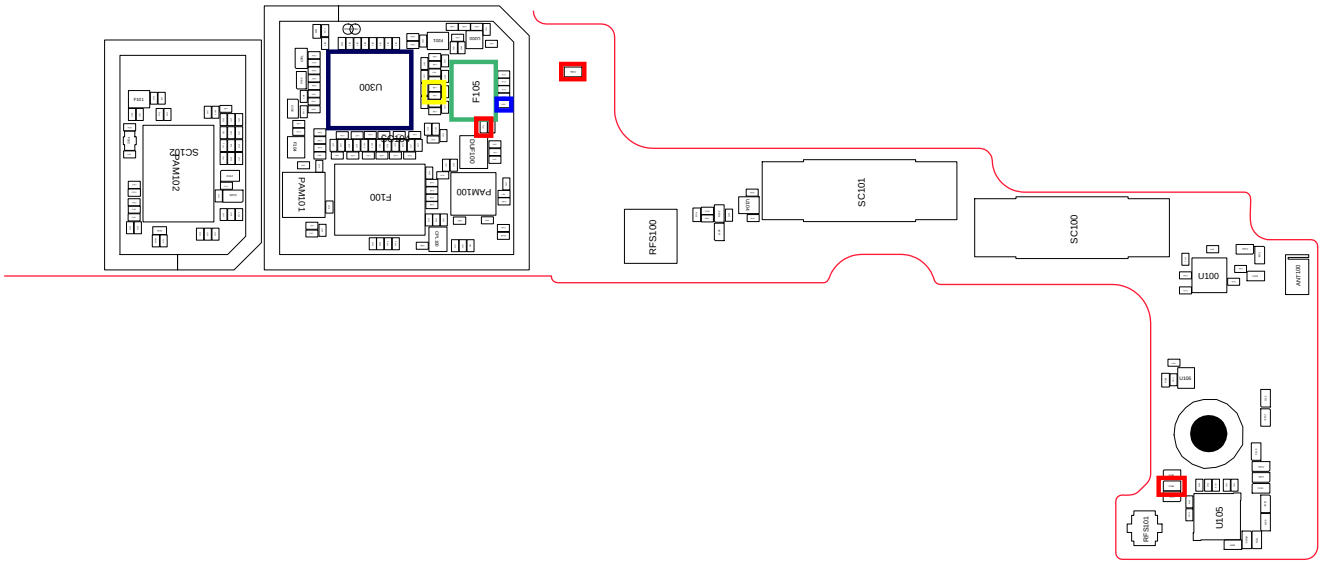

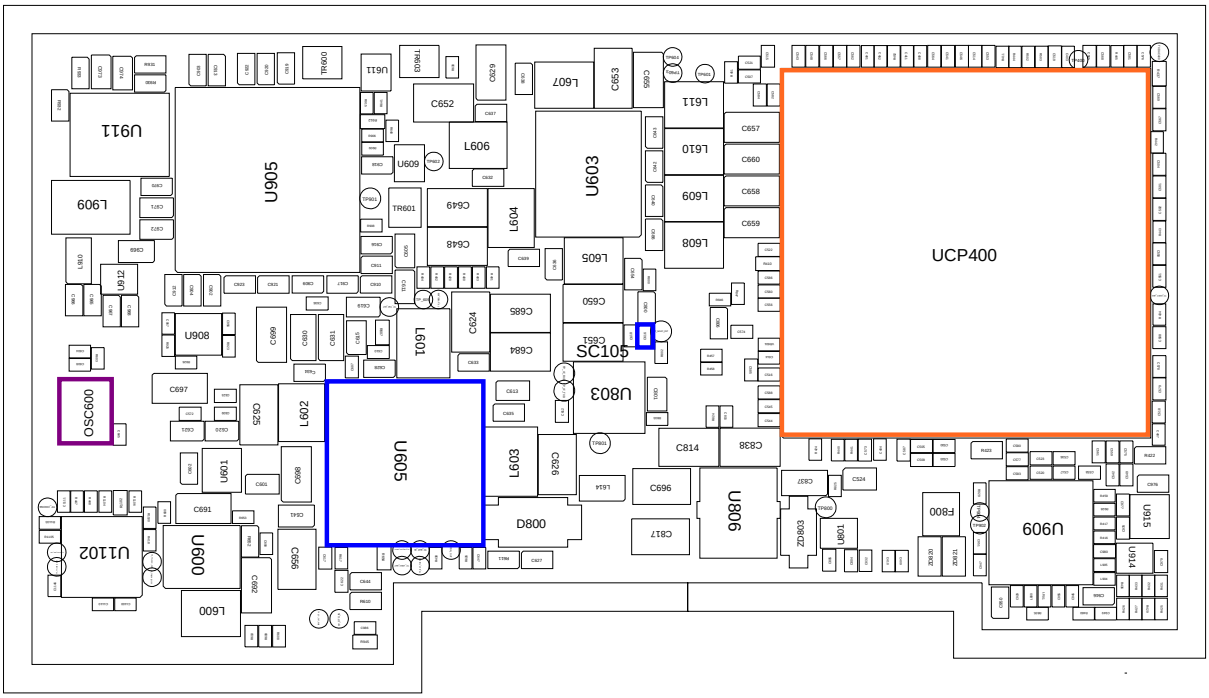

Confidential and proprietary-the contents in this service guide subject to change without prior notice.
Distribution, transmission, or infringement of any content or data from this document without Samsung's written authorization is strictly prohibited.